signetics

TELEVISION CHROMA SYSTEM

INTRODUCTION
LINEAR INTEGRATED CIRCUITS

5070
5071
5072

DESCRIPTION

The 5070, 5071, and 5072 are monolithic silicon integrated circuits that constitute a complete chroma system for color television receivers. The 5070 is a complete subcarrier regeneration system featuring a new concept of phase control applied to the oscillator circuit. The 5071 is a chroma amplifier system and the 5072 performs the demodulation function.

The 5070 utilizes the 16-lead plastic dual-in-line package; the 5071 and 5072 are supplied 14-lead plastic dual-in-line packages.

FEATURES

5070

- VOLTAGE CONTROL OSCILLATOR
- KEYED APC & ACC DETECTORS
- DC HUE CONTROL
- SHUNT REGULATOR

5071

- ACC CONTROLLED CHROMA AMPLIFIER
- DC CHROMA GAIN CONTROL
- COLOR KILLER
- AMPLIFIER SHORT-CIRCUIT PROTECTION

5072

- SYNCHRONOUS DETECTOR WITH COLOR DIFFERENCE MATRIX
- EMITTER-FOLLOWER OUTPUT AMPLIFIERS WITH SHORT-CIRCUIT PROTECTION

TYPICAL SCHEMATIC DIAGRAM

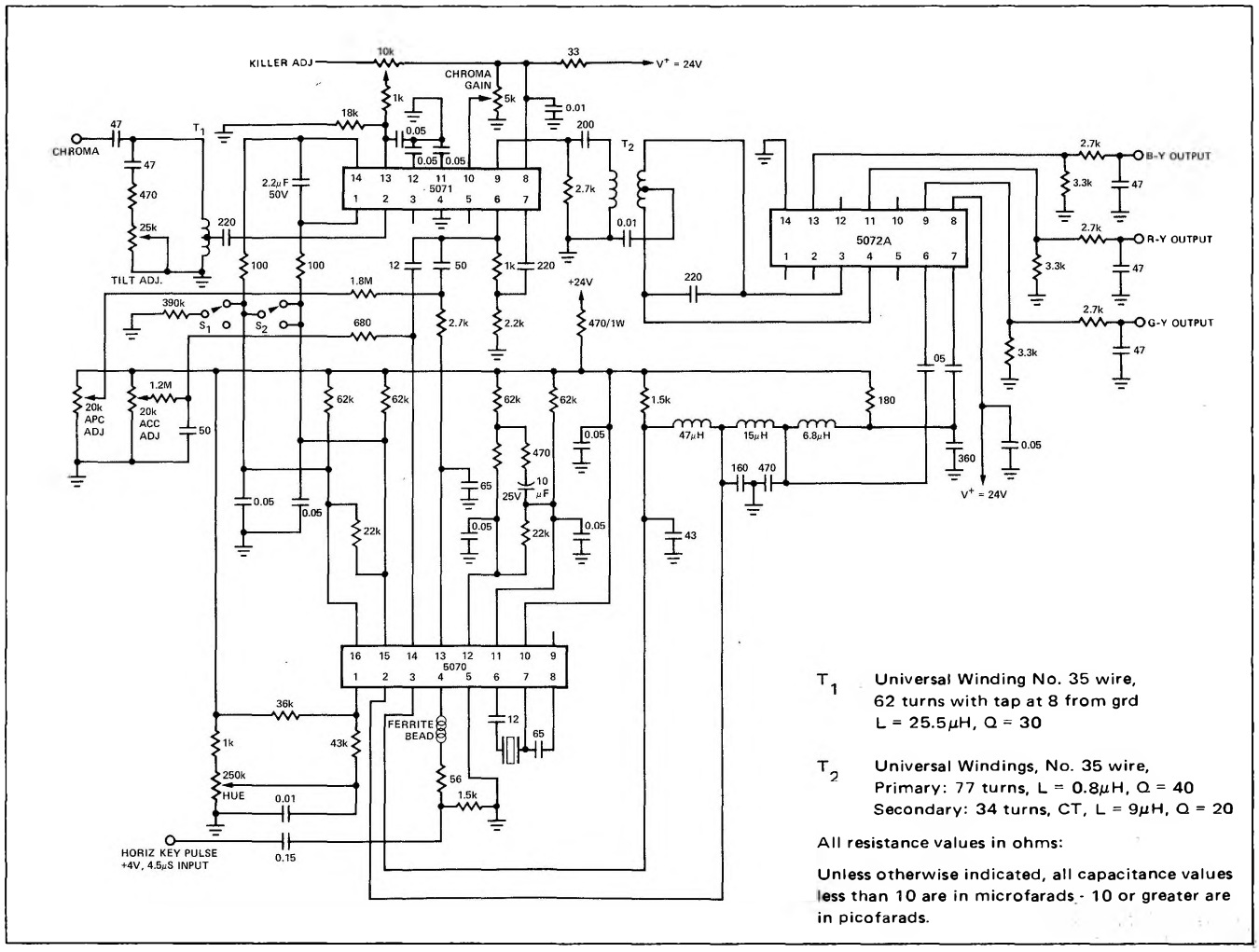
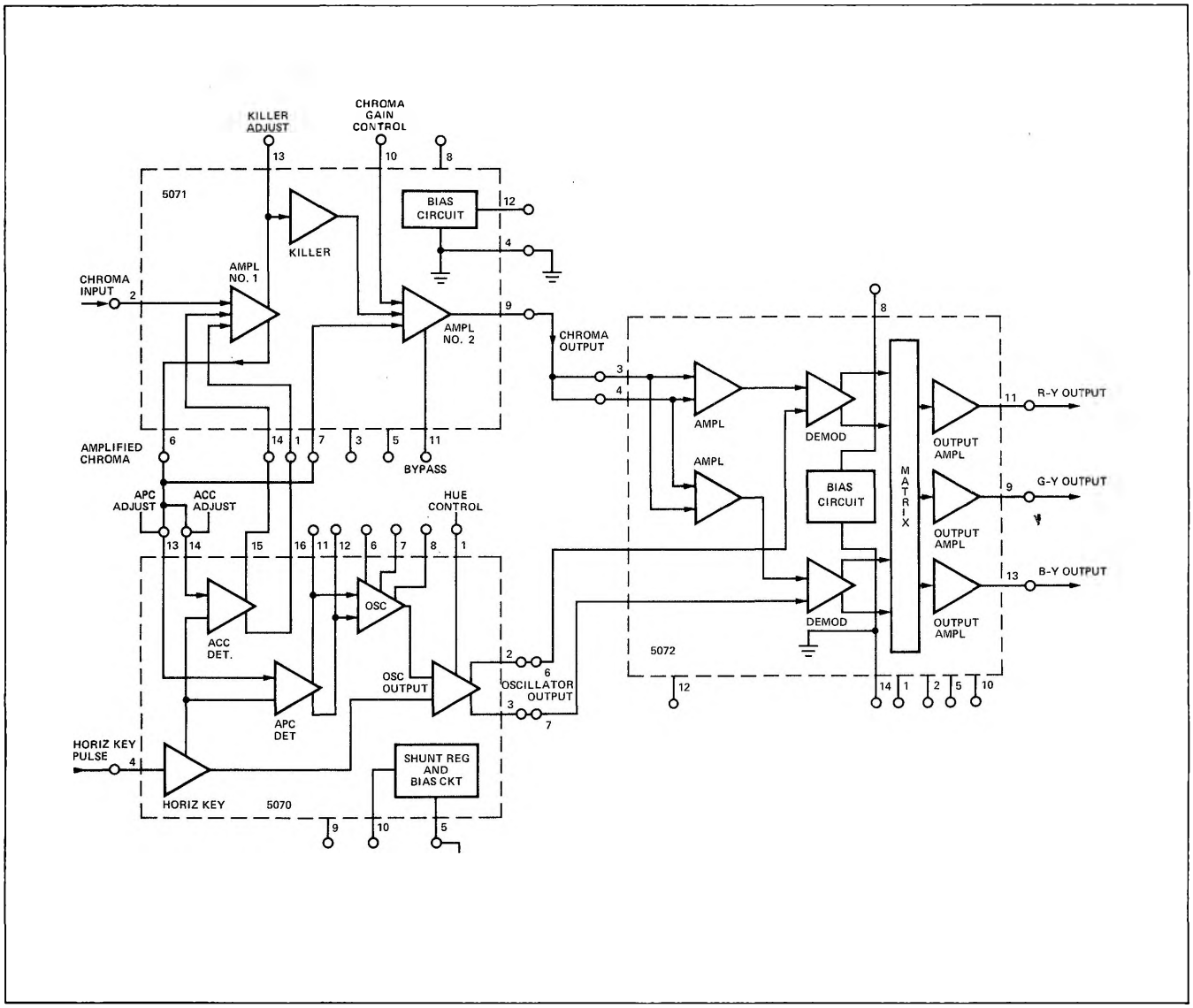
TYPICAL FUNCTIONAL DIAGRAM