National Semiconductor

September 1996

LMX2335/LMX2336/LMX2337 PLLatinum™ Dual Frequency Synthesizer for RF Personal Communications

LMX2335 1.1 GHz/1.1 GHz
LMX2336 2.0 GHz/1.1 GHz
LMX2337 550 MHz/550 MHz

General Description

The LMX2335, LMX2336 and LMX2337 are monolithic, integrated dual frequency synthesizers, including two high frequency prescalers, and are designed for applications requiring two RF phase-lock loops. They are fabricated using National's ABiC IV silicon BiCMOS process.

The LMX2335/36/37 contains two dual modulus prescalers. A 64/65 or a 128/129 prescaler can be selected for each RF synthesizer. A second reference divider chain is included in the IC for improved system noise. LMX2335/36/37, which employ a digital phase locked loop technique, combined with a high quality reference oscillator and loop filters, provide the tuning voltages for voltage controlled oscillators to generate very stable low noise RF local oscillator signals.

Serial data is transferred into the LMX2335/36/37 via a three wire interface (Data, Enable, Clock). Supply voltage can range from 2.7V to 5.5V. The LMX2335/36/37 feature very low current consumption; LMX2335/37 −10 mA at 3V, LMX2336 −13 mA at 3V. The LMX2335/37 are available in both a JEDEC SO and TSSOP 16-pin surface mount plastic package. The LMX2336 is available in a TSSOP 20-pin surface mount plastic package.

Features

- 2.7V to 5.5V operation
- Low current consumption
- Selectable powerdown mode: I_{CC} = 1 μA (typ)
- Dual modulus prescaler: 64/65 or 128/129
- Selectable charge pump TRI-STATE® mode
- Selectable charge pump current levels
- Selectable Fastlock™ mode

Applications

- Cellular telephone systems (AMPS, ETACS, RCR-27)
- Cordless telephone systems (DECT, ISM , PHS, CT-1+)
- Personal Communication Systems (DCS-1800, PCN-1900)
- Dual Mode PCS phones
- CATV
- Other wireless communication systems

Functional Block Diagram

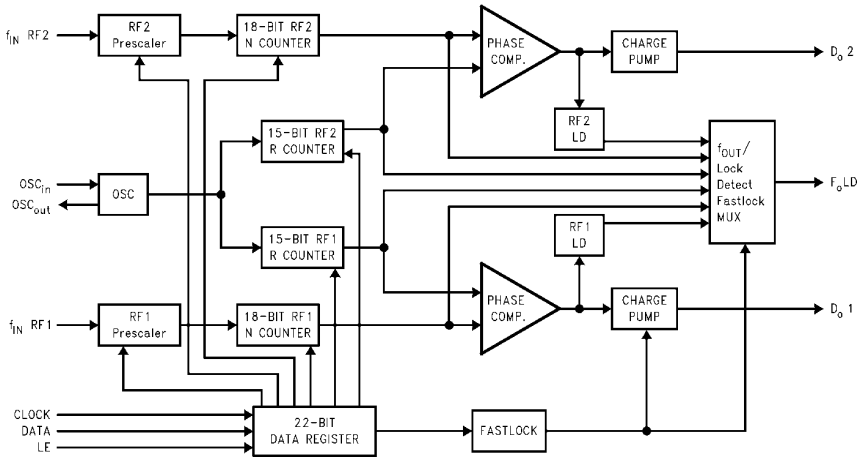

TL/W/12332–1

TRI-STATE® is a registered trademark of National Semiconductor Corporation.
Fastlock™, MICROWIRE™ and PLLatinum™ are trademarks of National Semiconductor Corporation.

Connection Diagrams

LMX2335/LMX2337

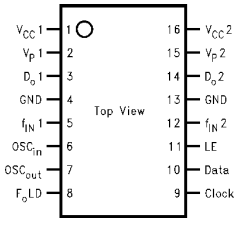

TL/W/12332–2

Order Number LMX2335M/LMX2335TM or LMX2337M/LMX2337TM
NS Package Number M16A and MTC16

LMX2336

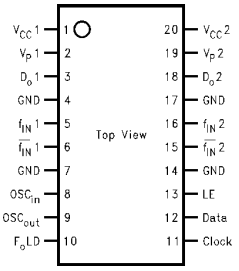

TL/W/12332–16

Order Number LMX2336TM
NS Package Number MTC20

Pin Description

Pin No. 2335/37	Pin No. 2336	Pin Name	I/O	Description
1	1	$V_{CC}1$		Power supply voltage input for RF1 analog and RF1 digital circuits. Input may range from 2.7V to 5.5V. $V_{CC}1$ must equal $V_{CC}2$. Bypass capacitors should be placed as close as possible to this pin and be connected directly to the ground plane.
2	2	V_p1		Power supply for RF1 charge pump. Must be $\geq V_{CC}$.
3	3	D_o1	O	RF1 charge pump output. For connection to a loop filter for driving the input of an external VCO.
4	4	GND		LMX2335/37: Ground for RF1 analog and RF1 digital circuits. LMX2336: Ground for RF digital circuitry.
5	5	f_{IN} 1	I	First RF prescaler input. Small signal input from the VCO.
X	6	$\overline{f_{IN}}$ 1	I	RF1 prescaler complementary input. A bypass capacitor should be placed as close as possible to this pin and be connected directly to the ground plane. Capacitor is optional with loss of some sensitivity.
X	7	GND		Ground for RF1 analog circuitry.
6	8	OSC_{in}	I	Oscillator input. The input has a $V_{CC}/2$ input threshold and can be driven from an external CMOS or TTL logic gate.
7	9	OSC_{out}	O	Oscillator output.
8	10	F_oLD	O	Multiplexed output of the programmable or reference dividers, lock detect signals and Fastlock mode. CMOS output *(see Programmable Modes)*.
9	11	Clock	I	High impedance CMOS Clock input. Data for the various latches is clocked in on the rising edge, into the 20-bit shift register.
10	12	Data	I	Binary serial data input. Data entered MSB first. The last two bits are the control bits. High impedance CMOS input.
11	13	LE	I	Load enable high impedance CMOS input. When LE goes HIGH, data stored in the shift registers is loaded into one of the 4 appropriate latches (control bit dependent).
X	14	GND		Ground for RF2 analog circuitry.
X	15	$\overline{f_{IN}}$ 2	I	RF2 prescaler complementary input. A bypass capacitor should be placed as close as possible to this pin and be connected directly to the ground plane. Capacitor is optional with loss of some sensitivity.
12	16	f_{IN} 2	I	RF2 prescaler input. Small signal input from the VCO.
13	17	GND		LMX2335/37: Ground for RF2 analog, RF2 digital, MICROWIRE™, F_oLD and Oscillator circuits. LMX2336: Ground for RF2 digital, MICROWIRE™, F_oLD and Oscillator circuits.
14	18	D_o 2	O	RF2 charge pump output. For connection to a loop filter for driving the input of an external VCO.
15	19	V_p2		Power supply for RF2 charge pump. Must be $\geq V_{CC}$.
16	20	$V_{CC}2$		Power supply voltage input for RF2 analog, RF2 digital, MICROWIRE™, F_oLD and Oscillator circuits. Input may range from 2.7V to 5.5V. $V_{CC}2$ must equal $V_{CC}1$. Bypass capacitors should be placed as close as possible to this pin and be connected directly to the ground plane.

Block Diagram

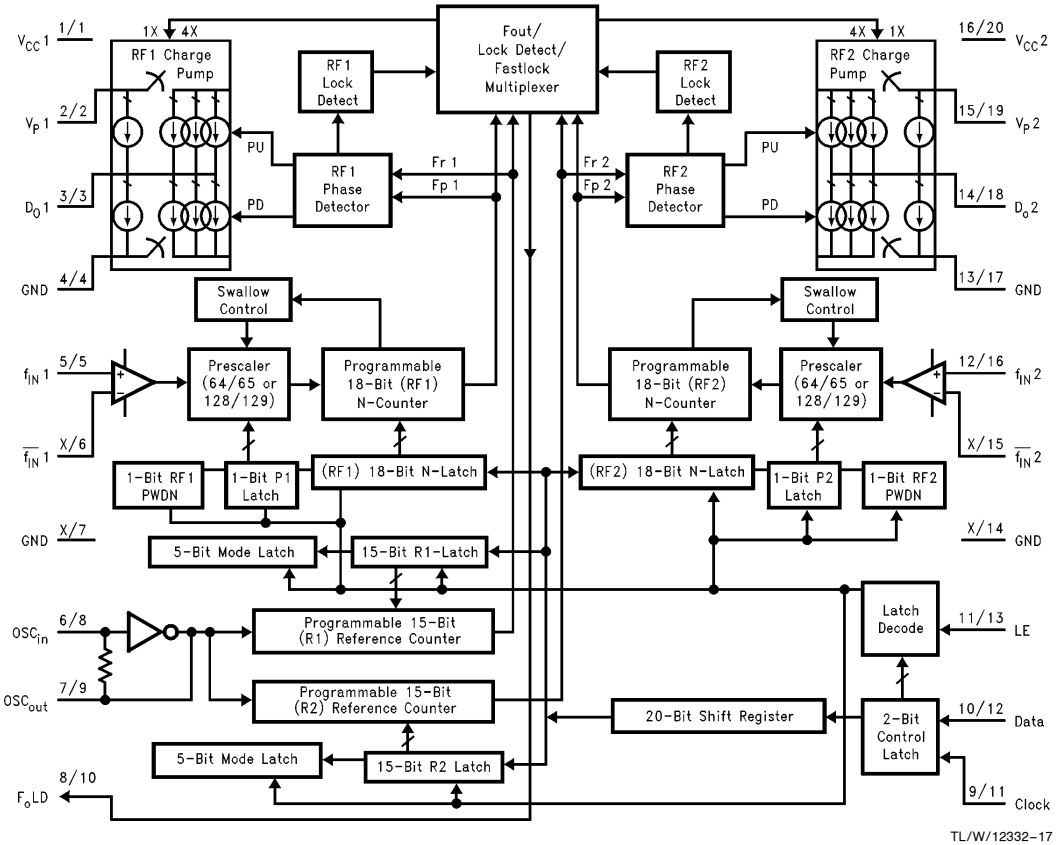

LMX2335/37 Pin # → 8/10 ← LMX2336 Pin #
Pin Name → F_oLD
X signifies a function not available

Note 1: $V_{CC}1$ supplies power to the RF1 prescaler, N-counter, R-counter, and phase detector. $V_{CC}2$ supplies power to the RF2 prescaler, N-counter, phase detector, R-counter along with the OSC_{in} buffer, MICROWIRE™, and F_oLD. $V_{CC}1$ and $V_{CC}2$ are clamped to each other by diodes and must be run at the same voltage level.

Note 2: V_P1 and V_P2 can be run separately as long as $V_P \geq V_{CC}$.

Absolute Maximum Ratings (1, 2)

If Military/Aerospace specified devices are required, please contact the National Semiconductor Sales Office/Distributors for availability and specifications.

Power Supply Voltage	
V_{CC}	−0.3V to +6.5V
V_P	−0.3V to +6.5V
Voltage on Any Pin with GND = 0V (V_I)	−0.3V to V_{CC} +0.3V
Storage Temperature Range (T_S)	−65°C to +150°C
Lead Temperature (solder 4 sec.) (T_L)	+260°C

Recommended Operating Conditions

Power Supply Voltage	
V_{CC}	2.7V to 5.5V
V_P	V_{CC} to +5.5V
Operating Temperature (T_A)	−40°C to +85°C

Note 1: Absolute Maximum Ratings indicate limits beyond which damage to the device may occur. Recommended Operating Conditions indicate conditions for which the device is intended to be functional, but do not guarantee specific performance limits. For guaranteed specifications and test conditions, see the Electrical Characteristics. The guaranteed specifications apply only for the test conditions listed.

Note 2: This device is a high performance RF integrated circuit with an ESD rating <2 keV and is ESD sensitive. Handling and assembly of this device should only be done at ESD protected workstations.

Electrical Characteristics V_{CC} = 5.0V, V_P = 5.0V; T_A = 25°C, except as specified

Symbol	Parameter		Conditions	Value			Units
				Min	Typ	Max	
I_{CC}	Power Supply Current	LMX2335/37 RF1 and RF2	V_{CC} = 2.7V to 5.5V		10	15	mA
I_{CC}		LMX2335/37 RF1 only			6	8	mA
I_{CC}		LMX2336 RF1 and RF2			13	18	mA
		LMX2336 RF1 only			7	11	mA
f_{IN} 1	Operating Frequency	LMX2335		0.100		1.1	GHz
f_{IN} 2				0.050		1.1	GHz
f_{IN}1		LMX2336		0.200		2.0	GHz
f_{IN}2				0.050		1.1	GHz
f_{IN} 1		LMX2337		100		550	MHz
f_{IN} 2				50		550	MHz
$I_{CC\text{-}PWDN}$	Powerdown Current	LMX2335/2336	V_{CC} = 5.5V		1	25	μA
		LMX2337				100	
f_{OSC}	Oscillator Frequency		With resonator load on OSC_{out}	5		20	MHz
f_{OSC}			No load on OSC_{out}	5		40	MHz
f_ϕ	Phase Detector Frequency					10	MHz
Pf_{IN} 1 and Pf_{IN} 2	RF Input Sensitivity		V_{CC} = 3.0V, f > 100 MHz	−15		+4	dBm
			V_{CC} = 5.0V, f > 100 MHz	−10		+4	
			V_{CC} = 2.7 to 5.5V, f > 100 MHz	−10		0	
V_{OSC}	Oscillator Sensitivity		OSC_{in}	0.5			V_{PP}
V_{IH}	High-Level Input Voltage		**	0.8 V_{CC}			V
V_{IL}	Low-Level Input Voltage		**			0.2 V_{CC}	V
I_{IH}	High-Level Input Current		V_{IH} = V_{CC} = 5.5V**	−1.0		1.0	μA
I_{IL}	Low-Level Input Current		V_{IL} = 0V, V_{CC} = 5.5V**	−1.0		1.0	μA
I_{IH}	Oscillator Input Current		V_{IH} = V_{CC} = 5.5V			100	μA
I_{IL}	Oscillator Input Current		V_{IL} = 0V, V_{CC} = 5.5V	−100			μA
$I_{D_O\text{-}SOURCE}$	Charge Pump Output Current		V_{D_O} = V_P/2, I_{CP_O} = LOW*		−1.25		mA
$I_{D_O\text{-}SINK}$			V_{D_O} = V_P/2, I_{CP_O} = LOW*		1.25		mA
$I_{D_O\text{-}SOURCE}$			V_{D_O} = V_P/2, I_{CP_O} = HIGH*		−5.0		mA
$I_{D_O\text{-}SINK}$			V_{D_O} = V_P/2, I_{CP_O} = HIGH*		5.0		mA
$I_{D_O\text{-}TRI}$	Charge Pump TRI-STATE Current	LMX2335 LMX2336	0.5V ≤ V_{D_O} ≤ V_P − 0.5V T = 25°C	−5.0		5.0	nA
$I_{D_O\text{-}TRI}$	Charge Pump TRI-STATE Current	LMX2337	0.5V ≤ V_{D_O} ≤ V_P − 0.5V T = 25°C		±5		nA

Electrical Characteristics $V_{CC} = 5.0V$, $V_P = 5.0V$; $T_A = 25°C$, except as specified (Continued)

Symbol	Parameter	Conditions	Value			Units
			Min	Typ	Max	
V_{OH}	High-Level Output Voltage	$I_{OH} = -500\ \mu A$	$V_{CC} - 0.4$			V
V_{OL}	Low-Level Output Voltage	$I_{OL} = 500\ \mu A$			0.4	V
t_{CS}	Data to Clock Set Up Time	See Data Input Timing	50			ns
t_{CH}	Data to Clock Hold Time	See Data Input Timing	10			ns
t_{CWH}	Clock Pulse Width High	See Data Input Timing	50			ns
t_{CWL}	Clock Pulse Width Low	See Data Input Timing	50			ns
t_{ES}	Clock to Load Enable Set Up Time	See Data Input Timing	50			ns
t_{EW}	Load Enable Pulse Width	See Data Input Timing	50			ns

*See PROGRAMMABLE MODES for I_{CP_O} description.

**Clock, Data and LE does not include $f_{IN}1$, $f_{IN}2$ and OSC_{in}.

Typical Performance Characteristics (Continued)

I_{CC} vs V_{CC}
LMX2335/37

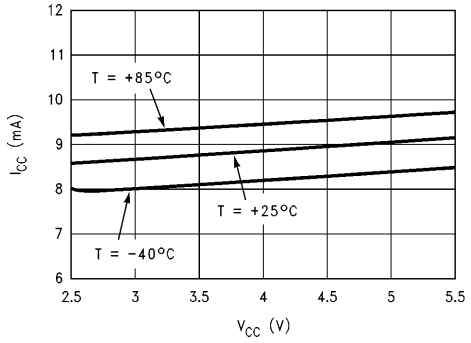

TL/W/12332–19

I_{CC} vs V_{CC}
LMX2336

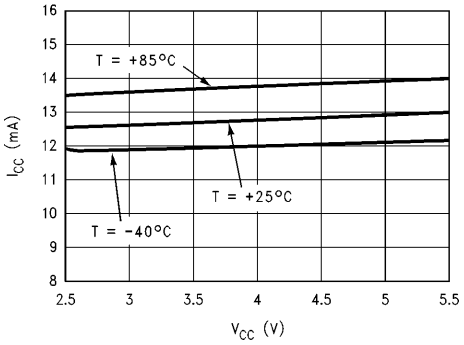

TL/W/12332–20

Charge Pump Current vs D_o Voltage
I_{CP} = HIGH

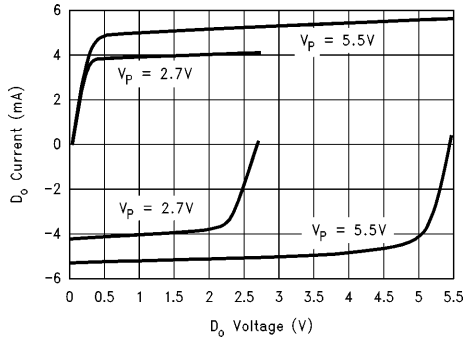

TL/W/12332–21

Charge Pump Current vs D_o Voltage
I_{CP} = LOW

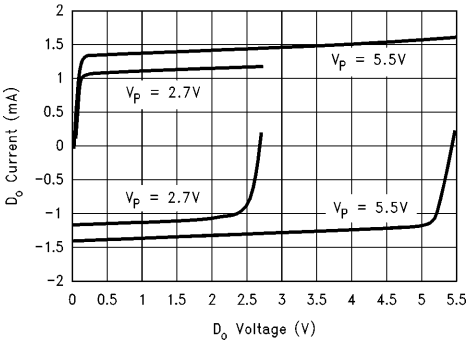

TL/W/12332–22

LMX2335/37 Input Impedance (for SO package)
V_{CC} = 2.7V to 5.5V, f_{IN} = 50 MHz to 1.5 GHz

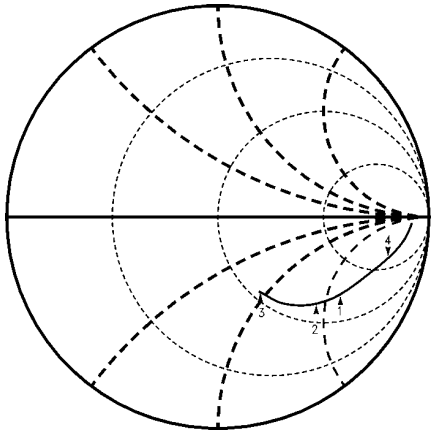

TL/W/12332–23

Marker 1 = 1 GHz, Real = 94, Imaginary = −118
Marker 2 = 1.2 GHz, Real = 72, Imaginary = −88
Marker 3 = 1.5 GHz, Real = 53, Imaginary = −45
Marker 4 = 500 MHz, Real = 201, Imaginary = −224

LMX2335/37 Input Impedance (for TSSOP package)
LMX2336 Input Impedance
V_{CC} = 2.7V to 5.5V, f_{IN} = 50 MHz to 2.5 GHz

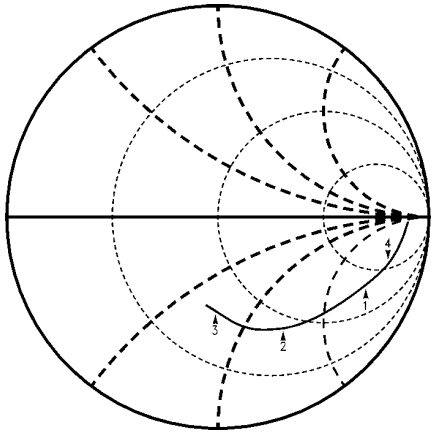

TL/W/12332–24

Marker 1 = 1 GHz, Real = 97, Imaginary = −146
Marker 2 = 1.89 GHz, Real = 43, Imaginary = −67
Marker 3 = 2.5 GHz, Real = 30, Imaginary = −33
Marker 4 = 500 MHz, Real = 189, Imaginary = −233

Typical Performance Characteristics (Continued)

I_{Do} TRI-STATE vs D_o Voltage

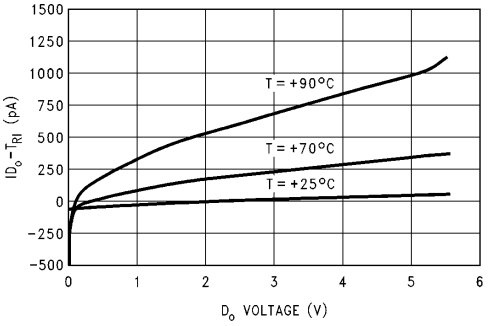

TL/W/12332–25

LMX2335/37 RF1 Sensitivity vs Frequency

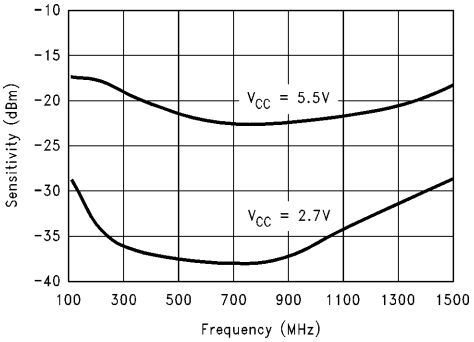

TL/W/12332–26

LMX2335/37 RF2 Sensitivity vs Frequency

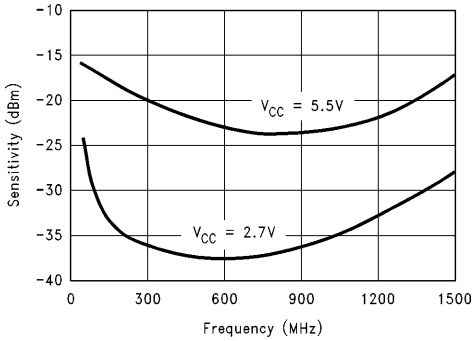

TL/W/12332–27

LMX2336 RF1 Sensitivity vs Frequency

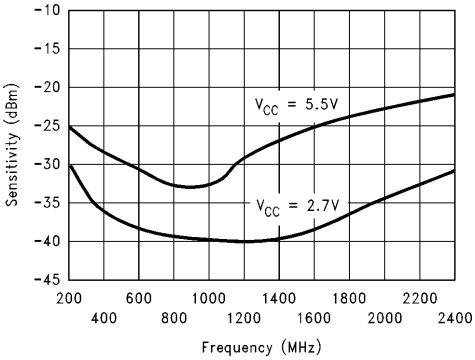

TL/W/12332–28

LMX2336 RF2 Sensitivity vs Frequency

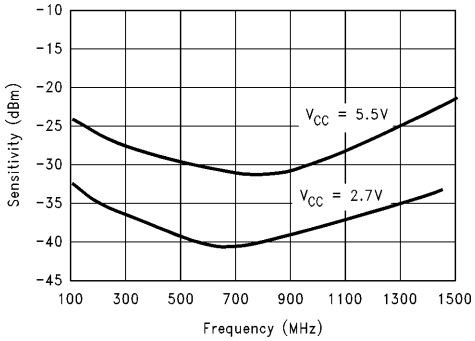

TL/W/12332–29

Oscillator Input Sensitivity vs Frequency

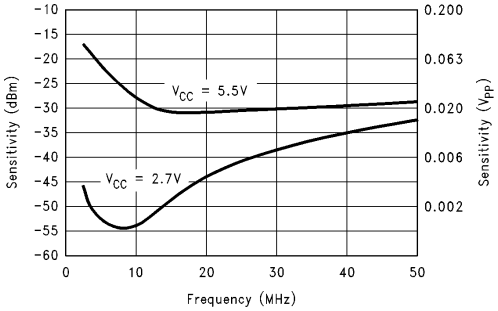

TL/W/12332–30

Functional Description

The simplified block diagram below shows the 22-bit data register, two 15-bit R Counters and two 18-bit N Counters (intermediate latches are not shown). The data stream is clocked (on the rising edge of Clock) into the DATA register, MSB first. The data stored in the shift register is loaded into one of the 4 appropriate latches on the rising edge of LE. The last two bits are the Control Bits. The DATA is transferred into the counters as follows:

Control Bits		DATA Location
C1	C2	
0	0	RF2 R Counter
0	1	RF1 R Counter
1	0	RF2 N Counter
1	1	RF1 N Counter

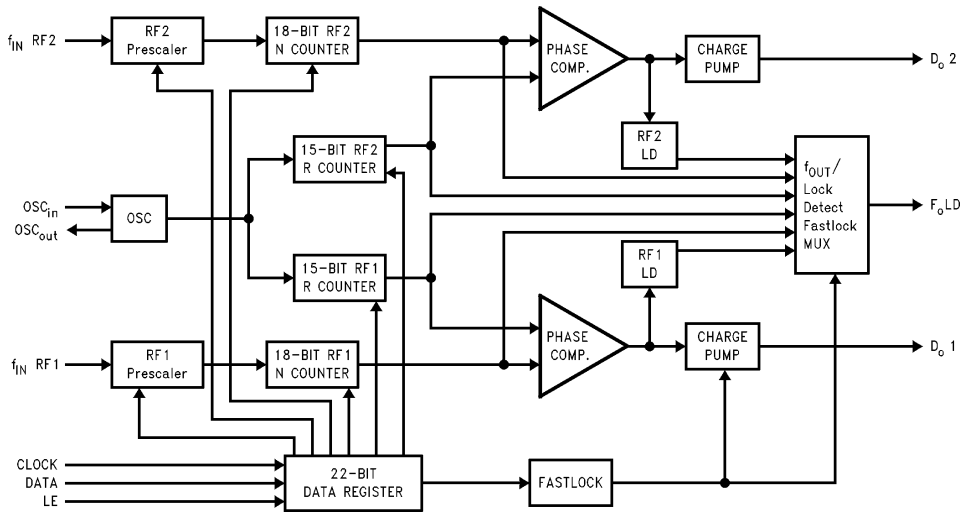

TL/W/12332–1

Functional Description (Continued)

PROGRAMMABLE REFERENCE DIVIDERS (RF1 AND RF2 R COUNTERS)

If the Control Bits are 00 or 01 (00 for RF2 and 01 for RF1) data is transferred from the 22-bit shift register into a latch which sets the 15-bit R Counter. Serial data format is shown below.

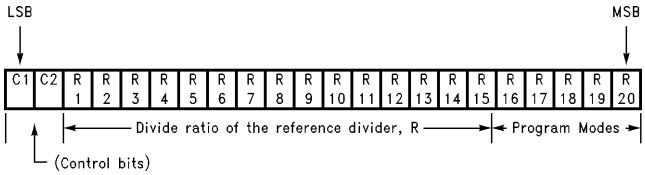

TL/W/12332–4

15-BIT PROGRAMMABLE REFERENCE DIVIDER RATIO (R COUNTER)

Divide Ratio	R 15	R 14	R 13	R 12	R 11	R 10	R 9	R 8	R 7	R 6	R 5	R 4	R 3	R 2	R 1
3	0	0	0	0	0	0	0	0	0	0	0	0	0	1	1
4	0	0	0	0	0	0	0	0	0	0	0	0	1	0	0
•	•	•	•	•	•	•	•	•	•	•	•	•	•	•	•
32767	1	1	1	1	1	1	1	1	1	1	1	1	1	1	1

Notes: Divide ratios less than 3 are prohibited.

Divide ratio: 3 to 32767

R1 to R15: These bits select the divide ratio of the programmable reference divider.

Data is shifted in MSB first.

PROGRAMMABLE DIVIDER (N COUNTER)

Each N counter consists of the 7-bit swallow counter (A counter) and the 11-bit programmable counter (B counter). If the Control Bits are 10 or 11 (10 for RF2 counter and 11 for RF1 counter) data is transferred from the 20-bit shift register into a 7-bit latch (which sets the Swallow (A) Counter) and an 11-bit latch (which sets the 11-bit programmable (B) Counter), MSB first. Serial data format is shown below.

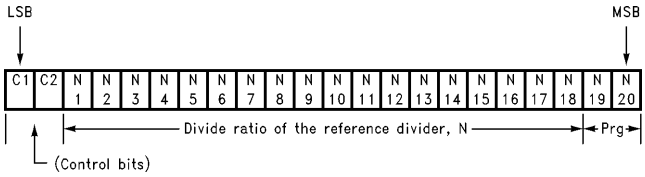

TL/W/12332–5

7-BIT SWALLOW COUNTER DIVIDE RATIO (A COUNTER)

Divide Ratio A	N 7	N 6	N 5	N 4	N 3	N 2	N 1
0	0	0	0	0	0	0	0
1	0	0	0	0	0	0	1
•	•	•	•	•	•	•	•
127	1	1	1	1	1	1	1

Notes: Divide ratio: 0 to 127

$B \geq A$

$A < P$

Functional Description (Continued)

11-BIT PROGRAMMABLE COUNTER DIVIDE RATIO (B COUNTER)

Divide Ratio B	N 18	N 17	N 16	N 15	N 14	N 13	N 12	N 11	N 10	N 9	N 8
3	0	0	0	0	0	0	0	0	0	1	1
4	0	0	0	0	0	0	0	0	1	0	0
•	•	•	•	•	•	•	•	•	•	•	•
2047	1	1	1	1	1	1	1	1	1	1	1

Note: Divide ratio: 3 to 2047 (Divide ratios less than 3 are prohibited)
$B \geq A$

PULSE SWALLOW FUNCTION

$f_{VCO} = [(P \times B) + A] \times f_{OSC}/R$

f_{VCO}: Output frequency of external voltage controlled oscillator (VCO)
B: Preset divide ratio of binary 11-bit programmable counter (3 to 2047)
A: Preset divide ratio of binary 7-bit swallow counter
($0 \leq A \leq P$; $A \leq B$)
f_{OSC}: Output frequency of the external reference frequency oscillator
R: Preset divide ratio of binary 15-bit programmable reference counter (3 to 32767)
P: Preset modulus of dual modulus prescaler ($P = 64$ or 128)

PROGRAMMABLE MODES

Several modes of operation can be programmed with bits R16−R20 including the phase detector polarity, charge pump tristate and the output of the F_oLD pin. The prescaler and power down modes are selected with bits N19 and N20. The programmable modes are shown in Table I. Truth table for the programmable modes and F_oLD output are shown in Table II and Table III.

TABLE I. Programmable Modes

C1	C2	R16	R17	R18	R19	R20
0	0	RF2 Phase Detector Polarity	RF2 I_{CP_o}	RF2 D_o TRI-STATE	RF2 LD	RF2 F_o
0	1	RF1 Phase Detector Polarity	RF1 I_{CP_o}	RF1 D_o TRI-STATE	RF1 LD	RF1 F_o

C1	C2	N19	N20
1	0	RF2 Prescaler	Pwdn RF2
1	1	RF1 Prescaler	Pwdn RF1

Functional Description (Continued)

TABLE II. Mode Select Truth Table

	Phase Detector Polarity(3)	D_o TRI-STATE	I_{CP_o}(1)	RF1 Prescaler	RF2 Prescaler	Pwdn(2)
0	Negative	Normal Operation	LOW	64/65	64/65	pwrd up
1	Positive	TRI-STATE	HIGH	128/129	128/129	pwrd dn

Note 1: The I_{CP_o} LOW current state $= 1/4 \times I_{CP_o}$ HIGH current.

Note 2: Activation of the RF2 PLL or RF1 PLL powerdown modes result in the disabling of the respective N counter divider and debiasing of its respective f_{IN} inputs (to a high impedance state). The powerdown function is gated by the charge pump to prevent unwanted frequency jumps. Once the powerdown program mode is loaded, the part will go into powerdown mode when the charge pump reaches a TRI-STATE condition. The R counter and Oscillator functionality does not become disabled until *both* RF2 and RF1 powerdown bits are activated. The OSC_{in} is connected to V_{CC} through 100 kΩ resistor and the OSC_{out} goes HIGH when this condition exists. The MICROWIRE™ control register remains active and capable of loading and latching data during all of the powerdown modes.

Note 3: PHASE DETECTOR POLARITY

Depending upon VCO characteristics, the R16 bits should be set accordingly:

When VCO characteristics are positive like (1), R16 should be set HIGH;

When VCO characteristics are negative like (2), R16 should be set LOW.

VCO Characteristics

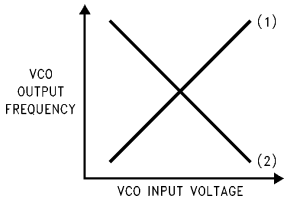

TL/W/12332–7

TABLE III. The F_oLD Output Truth Table

RF1 R[19] (RF1 LD)	RF2 R[19] (RF2 LD)	RF1 R[20] (RF1 F_O)	RF2 R[20] (RF2 F_O)	F_oLD Output State
0	0	0	0	Disabled (Note 1)
0	1	0	0	RF2 Lock Detect (Note 2)
1	0	0	0	RF1 Lock Detect (Note 2)
1	1	0	0	RF1/RF2 Lock Detect (Note 2)
X	0	0	1	RF2 Reference Divider Output
X	0	1	0	RF1 Reference Divider Output
X	1	0	1	RF2 Programmable Divider Output
X	1	1	0	RF1 Programmable Divider Output
0	0	1	1	Fastlock (Note 3)
0	1	1	1	For Internal use only
1	0	1	1	For Internal use only
1	1	1	1	Counter Reset (Note 4)

X—don't care condition

Note 1: When the F_oLD output is disabled it is actively pulled to a low logic state.

Note 2: Lock detect output provided to indicate when the VCO frequency is in ''lock''. When the loop is locked and a lock detect mode is selected, the pins output is HIGH, with narrow pulses LOW. In the RF1/RF2 lock detect mode a locked condition is indicated when RF2 and RF1 are both locked.

Note 3: The Fastlock mode utilized the F_oLD output pin to switch a second loop filter damping resistor to ground during fastlock operation. Activation of Fastlock occurs whenever the RF loop's Icpo magnitude bit #17 is selected HIGH (while the #19 and #20 mode bits are set for Fastlock).

Note 4: The Counter Reset mode bits R19 and R20 when activated reset all counters. Upon removal of the Reset bits the N counter resumes counting in ''close'' alignment with the R counter. (The maximum error is one prescaler cycle). If the Reset bits are activated the R counter is also forced to Reset, allowing smooth acquisition upon powering up.

Functional Description (Continued)

SERIAL DATA INPUT TIMING

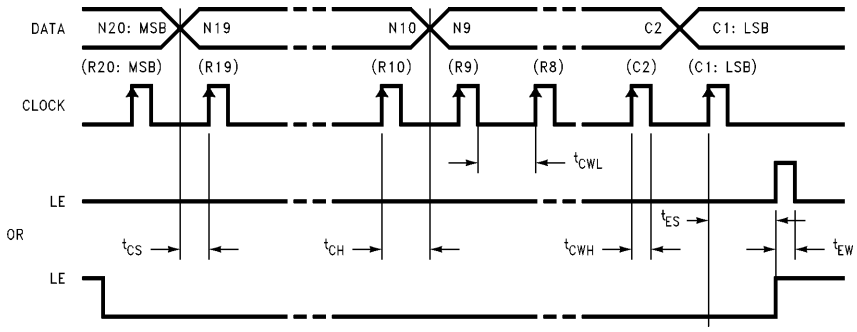

TL/W/12332–8

Notes: Parenthesis data indicates programmable reference divider data.

Data shifted into register on clock rising edge.

Data is shifted in MSB first.

Test Conditions: The Serial Data Input Timing is tested using a symmetrical waveform around $V_{CC}/2$. The test waveform has an edge rate of 0.6V/ns with amplitudes of 2.2V @ V_{CC} = 2.7V and 2.6V @ V_{CC} = 5.5V.

PHASE COMPARATOR AND INTERNAL CHARGE PUMP CHARACTERISTICS

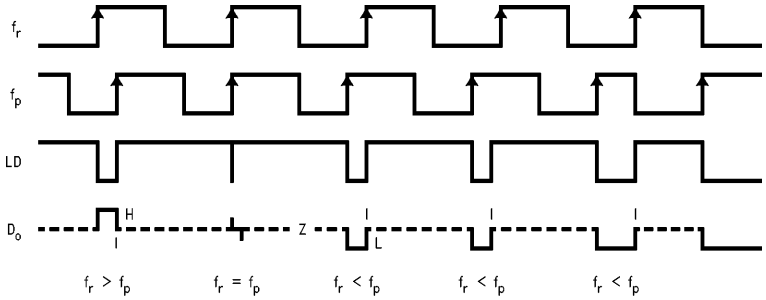

TL/W/12332–9

Notes: Phase difference detection range: -2π to $+2\pi$

The minimum width pump up and pump down current pulses occur at the D_o pin when the loop is locked.

Typical Application Example

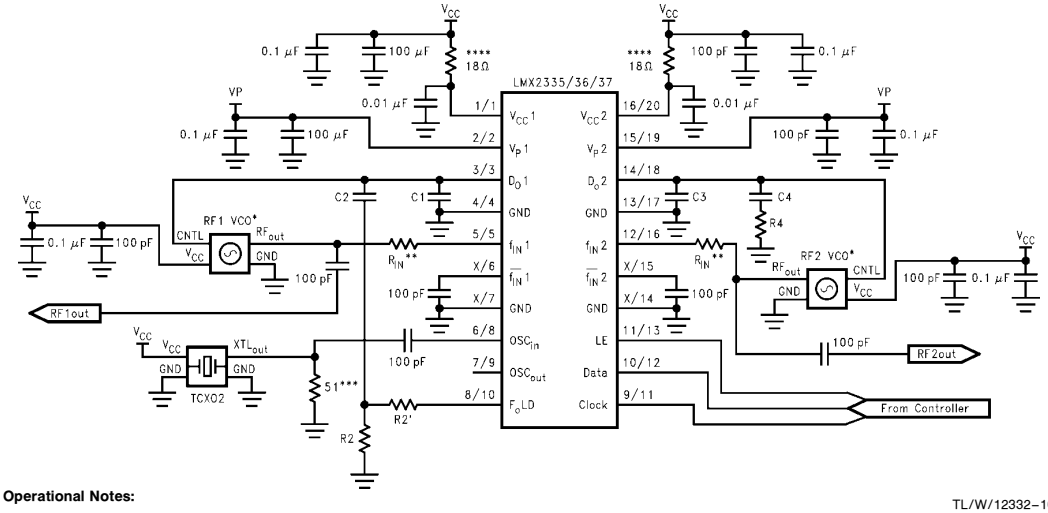

TL/W/12332–10

Operational Notes:

* VCO is assumed AC coupled.

** R_{IN} increases impedance so that VCO output power is provided to the load rather than the PLL. Typical values are 10Ω to 200Ω depending on the VCO power level. f_{IN} RF impedance ranges from 40Ω to 100Ω. f_{IN} IF impedances are higher.

*** 50Ω termination is often used on test boards to allow use of external reference oscillator. For most typical products a CMOS clock is used and no terminating resistor is required. OSC_{in} may be AC or DC coupled. AC coupling is recommended because the input circuit provides its own bias. (See *Figure* below).

**** Adding RC filters to the V_{CC} lines is recommended to reduce loop-to-loop noise coupling.

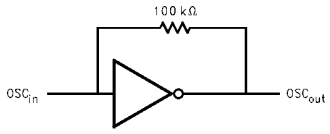

TL/W/12332–11

Application Hints:

Proper use of grounds and bypass capacitors is essential to achieve a high level of performance. Crosstalk between pins can be reduced by careful board layout.

This is an electrostatic sensitive device. It should be handled only at static free work stations.

Application Information

A block diagram of the basic phase locked loop is shown in *Figure 1.*

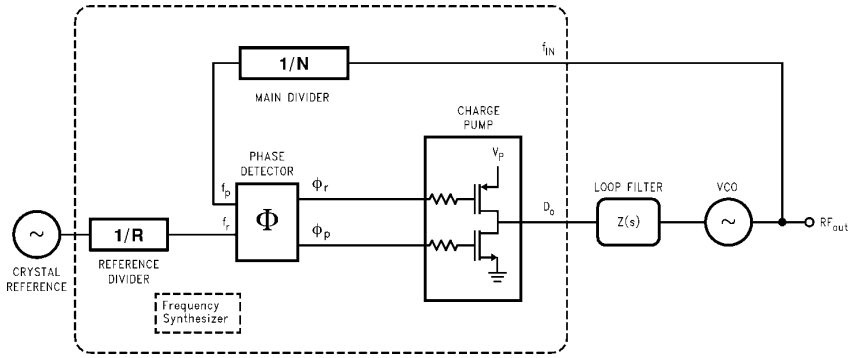

TL/W/12332–12

FIGURE 1. Conventional PLL Architecture

Loop Gain Equations

A linear control system model of the phase feedback for a PLL in the locked state is shown in *Figure 2*. The open loop gain is the product of the phase comparator gain (K_ϕ), the VCO gain (K_{VCO}/s), and the loop filter gain Z(s) divided by the gain of the feedback counter modulus (N). The passive loop filter configuration used is displayed in *Figure 3*, while the complex impedance of the filter is given in equation 2.

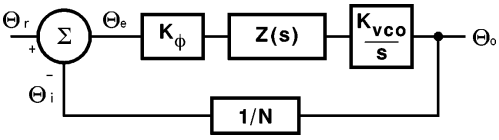

TL/W/12332–14

FIGURE 2. PLL Linear Model

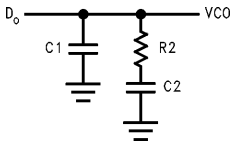

TL/W/12332–13

FIGURE 3. Passive Loop Filter

$$\text{Open Loop gain} = H(s)\,G(s) = \frac{\Theta_i}{\Theta_e} = \frac{K_\phi\, Z(s)\, K_{VCO}}{Ns} \quad (1)$$

$$Z(s) = \frac{s(C2 \bullet R2) + 1}{S^2\,(C1 \bullet C2 \bullet R2) + sC1 + sC2} \quad (2)$$

The time constants which determine the pole and zero frequencies of the filter transfer function can be defined as

$$T1 = R2 \bullet \frac{C1 \bullet C2}{C1 + C2} \quad (3a)$$

$$T2 = R2 \bullet C2 \quad (3b)$$

The 3rd order PLL Open Loop Gain can be calculated in terms of frequency, ω, the filter time contants T1 and T2, and the design constants $K\phi$, K_{VCO}, and N.

$$G(s) \bullet H(s)\Big|_{S = j \bullet w} = \frac{-K\phi \bullet K_{VCO}\,(1 + jw \bullet T2)}{w^2\,C1 \bullet N\,(1 + jw \bullet T1)} \bullet \frac{T1}{T2} \quad (4)$$

From equation 3 we can see that the phase term will be dependent on the single pole and zero such that the phase margin is determined in equation 5.

$$\phi(\omega) = \tan^{-1}(\omega \bullet T2) - \tan^{-1}(\omega \bullet T1) + 180°C \quad (5)$$

A plot of the magnitude and phase of G(s) H(s) for a stable loop, is shown in *Figure 4* with a solid trace. The parameter ϕ_p shows the amount of phase margin that exists at the point the gain drops below zero (the cutoff frequency wp of the loop). In a critically damped system, the amount of phase margin would be approximately 45 degrees.

If we were now to redefine the cut off frequency, wp', as double the frequency which gave us our original loop bandwidth, wp, the loop response time would be approximately halved. Because the filter attenuation at the comparison frequency also diminishes, the spurs would have increased by approximately 6 dB. In the proposed Fastlock scheme, the higher spur levels and wider loop filter conditions would exist only during the initial lock-on phase—just long enough to reap the benefits of locking faster. The objective would be to open up the loop bandwidth but not introduce any additional complications or compromises related to our original design criteria. We would ideally like to momentarily shift the curve *Figure 4* over to a different cutoff frequency, illustrated by dotted line, without affecting the relative open loop gain and phase relationships. To maintain the same gain/phase relationship at twice the original cutoff frequency, other terms in the gain and phase equations 4 and 5 will have to compensate by the corresponding ''1/w'' or ''1/w^2'' factor. Examination of equations 3 and 5 indicates the damping resistor variable R2 could be chosen to compensate with ''w'' terms for the phase margin. This implies that another resistor of equal value to R2 will need to be switched in parallel with R2 during the initial lock period. We must also insure that the magnitude of the open loop gain, H(s)G(s) is equal to zero at wp' = 2 wp. K_{VCO}, $K\phi$, N, or the net product of these terms can be changed by a factor of 4, to counteract with w^2 term present in the denominator of

Application Information (Continued)

equation 3. The Kϕ term was chosen to complete the transformation because it can readily be switched between 1X and 4X values. This is accomplished by increasing the charge pump output current from 1 mA in the standard mode to 4 mA in Fastlock.

Fastlock Circuit Implementation

A diagram of the Fastlock scheme as implemented in National Semiconductors LMX2335/36/37 PLL is shown in *Figure 5.* When a new frequency is loaded, and the RF1 I_{CPo} bit is set high, the charge pump circuit receives an input to deliver 4 times the normal current per unit phase error while an open drain NMOS on chip device switches in a second R2 resistor element to ground. The user calculates the loop filter component values for the normal steady state considerations. The device configuration ensures that as long as a second identical damping resistor is wired in appropriately, the loop will lock faster without any additional stability considerations to account for. Once locked on the correct frequency, the user can return the PLL to standard low noise operation by sending a MICROWIRE instruction with the RF1 I_{CPo} bit set low. This transition does not affect the charge on the loop filter capacitors and is enacted synchronous with the charge pump output. This creates a nearly seamless change between Fastlock and standard mode.

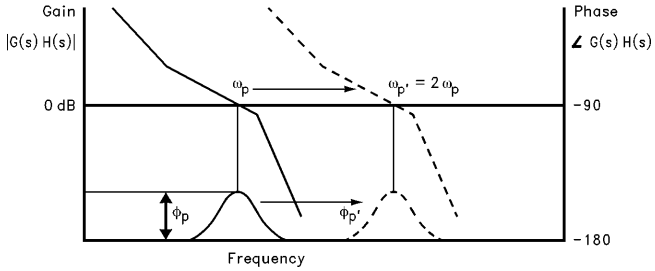

TL/W/12332–15

FIGURE 4.Open Loop Response Bode Plot

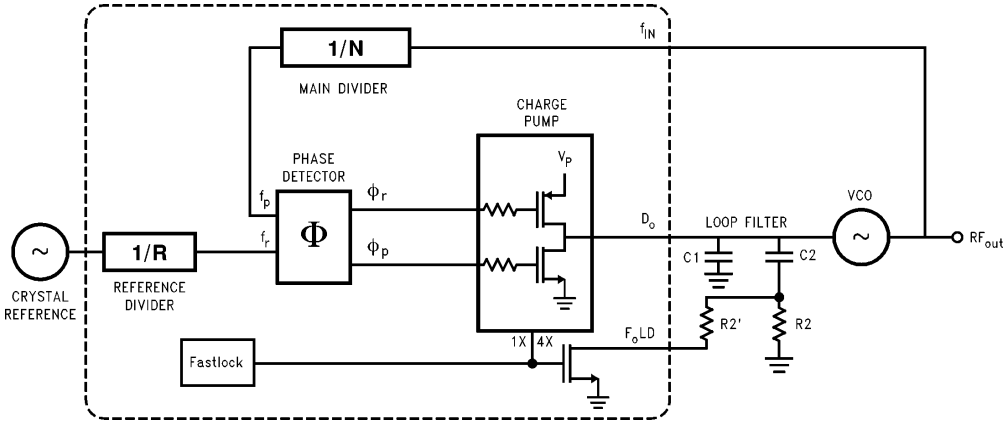

TL/W/12332–18

FIGURE 5. Fastlock PLL Architecture

Physical Dimensions inches (millimeters) unless otherwise noted

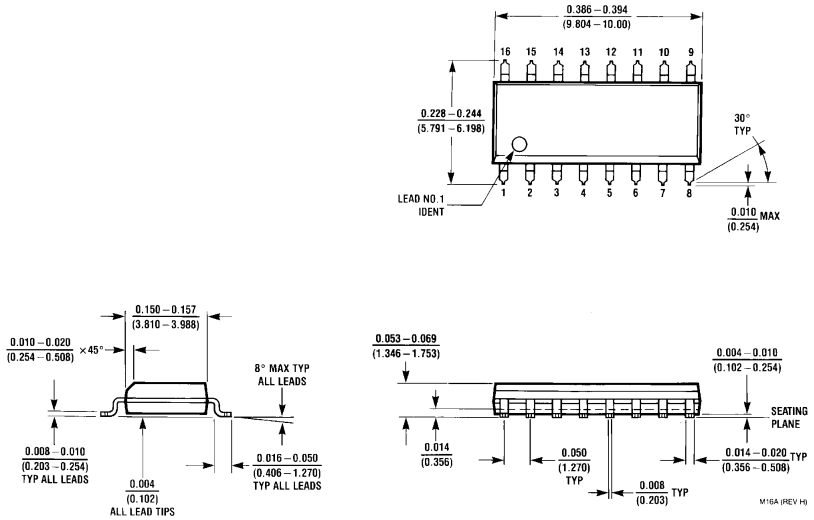

JEDEC 16-Lead (0.150″ Wide) Small Outline Molded Package (M)
Order Number LMX2335M or LMX2337M
***For Tape and Reel (2500 Units Per Reel)**
Order Number LMX2335MX or LMX2337MX
NS Package Number M16A

Physical Dimensions inches (millimeters) unless otherwise noted (Continued)

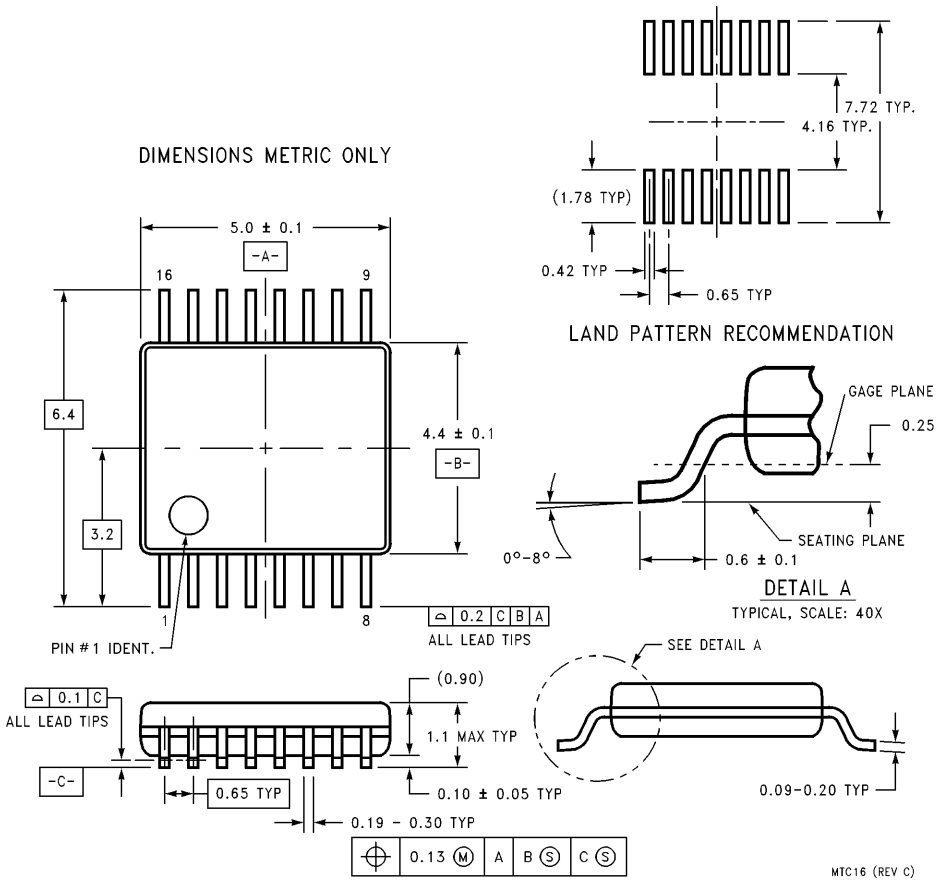

16-Lead Thin Shrink Small Outline Package (TM)
Order Number LMX2335TM or LMX2337TM
***For Tape and Reel (2500 Units Per Reel)**
Order Number LMX2335TMX or LMX2337TMX
NS Package Number MTC16

Physical Dimensions inches (millimeters) unless otherwise noted (Continued)

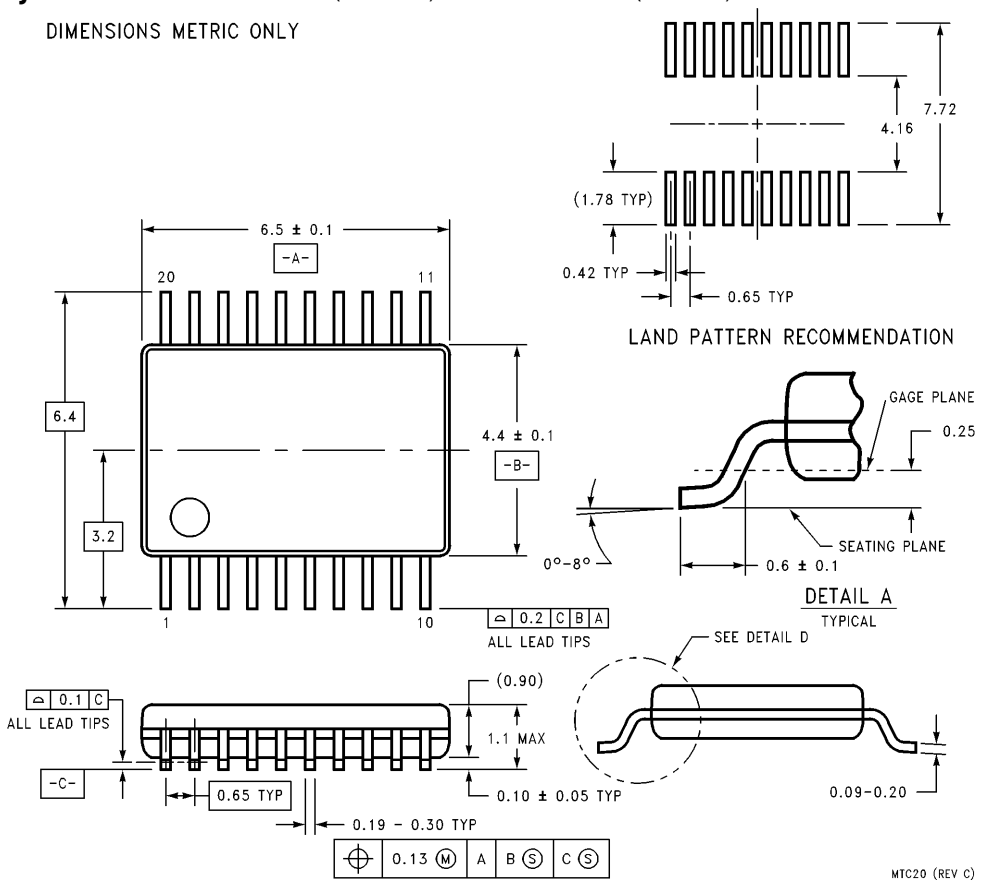

20-Lead (0.173″ Wide) Thin Shrink Small Outline Package (TM)
Order Number LMX2336TM
***For Tape and Reel (2500 Units Per Reel)**
Order Number LMX2336TMX
NS Package Number MTC20

LIFE SUPPORT POLICY

NATIONAL'S PRODUCTS ARE NOT AUTHORIZED FOR USE AS CRITICAL COMPONENTS IN LIFE SUPPORT DEVICES OR SYSTEMS WITHOUT THE EXPRESS WRITTEN APPROVAL OF THE PRESIDENT OF NATIONAL SEMICONDUCTOR CORPORATION. As used herein:

1. Life support devices or systems are devices or systems which, (a) are intended for surgical implant into the body, or (b) support or sustain life, and whose failure to perform, when properly used in accordance with instructions for use provided in the labeling, can be reasonably expected to result in a significant injury to the user.
2. A critical component is any component of a life support device or system whose failure to perform can be reasonably expected to cause the failure of the life support device or system, or to affect its safety or effectiveness.

National Semiconductor Corporation
1111 West Bardin Road
Arlington, TX 76017
Tel: 1(800) 272-9959
Fax: 1(800) 737-7018

http://www.national.com

National Semiconductor Europe
Fax: +49 (0) 180-530 85 86
Email: europe.support@nsc.com
Deutsch Tel: +49 (0) 180-530 85 85
English Tel: +49 (0) 180-532 78 32
Français Tel: +49 (0) 180-532 93 58
Italiano Tel: +49 (0) 180-534 16 80

National Semiconductor Hong Kong Ltd.
13th Floor, Straight Block,
Ocean Centre, 5 Canton Rd.
Tsimshatsui, Kowloon
Hong Kong
Tel: (852) 2737-1600
Fax: (852) 2736-9960

National Semiconductor Japan Ltd.
Tel: 81-043-299-2308
Fax: 81-043-299-2408