- **Wide Operating Voltage Range of 2 V to 6 V**
- **High-Current 3-State True Outputs Can Drive Up To 15 LSTTL Loads**
- **Eight D-Type Flip-Flops in a Single Package**
- **Full Parallel Access for Loading**
- **Low Power Consumption, 80-μA Max I_{CC}**
- **Typical t_{pd} = 14 ns**
- **±6-mA Output Drive at 5 V**
- **Low Input Current of 1 μA Max**

SN54HC374 . . . J OR W PACKAGE
SN74HC374 . . . DB, DW, N, NS, OR PW PACKAGE
(TOP VIEW)

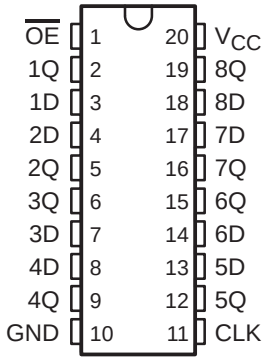

SN54HC374 . . . FK PACKAGE
(TOP VIEW)

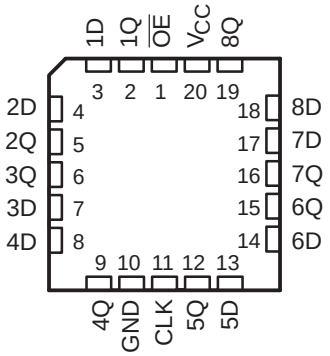

description/ordering information

These 8-bit flip-flops feature 3-state outputs designed specifically for driving highly capacitive or relatively low-impedance loads. They are particularly suitable for implementing buffer registers, I/O ports, bidirectional bus drivers, and working registers.

The eight flip-flops of the ’HC374 devices are edge-triggered D-type flip-flops. On the positive transition of the clock (CLK) input, the Q outputs are set to the logic levels that were set up at the data (D) inputs.

An output-enable ($\overline{OE}$) input places the eight outputs in either a normal logic state (high or low logic levels) or the high-impedance state. In the high-impedance state, the outputs neither load nor drive the bus lines significantly. The high-impedance state and increased drive provide the capability to drive bus lines without interface or pullup components.

ORDERING INFORMATION

T_A	PACKAGE†		ORDERABLE PART NUMBER	TOP-SIDE MARKING
−40°C to 85°C	PDIP − N	Tube of 20	SN74HC374N	SN74HC374N
	SOIC − DW	Tube of 25	SN74HC374DW	HC374
		Reel of 2000	SN74HC374DWR	
	SOP − NS	Reel of 2000	SN74HC374NSR	HC374
	SSOP − DB	Reel of 2000	SN74HC374DBR	HC374
	TSSOP − PW	Tube of 2000	SN74HC374PWR	HC374
		Reel of 250	SN74HC374PWT	
−55°C to 125°C	CDIP − J	Tube of 20	SNJ54HC374J	SNJ54HC374J
	CFP − W	Tube of 85	SNJ54HC374W	SNJ54HC374W
	LCCC − FK	Tube of 55	SNJ54HC374FK	SNJ54HC374FK

† Package drawings, standard packing quantities, thermal data, symbolization, and PCB design guidelines are available at www.ti.com/sc/package.

Please be aware that an important notice concerning availability, standard warranty, and use in critical applications of Texas Instruments semiconductor products and disclaimers thereto appears at the end of this data sheet.

PRODUCTION DATA information is current as of publication date. Products conform to specifications per the terms of Texas Instruments standard warranty. Production processing does not necessarily include testing of all parameters.

Copyright © 2003, Texas Instruments Incorporated
On products compliant to MIL-PRF-38535, all parameters are tested unless otherwise noted. On all other products, production processing does not necessarily include testing of all parameters.

description/ordering information (continued)

$\overline{OE}$ does not affect the internal operations of the flip-flops. Old data can be retained or new data can be entered while the outputs are in the high-impedance state.

To ensure the high-impedance state during power up or power down, $\overline{OE}$ should be tied to V_{CC} through a pullup resistor; the minimum value of the resistor is determined by the current-sinking capability of the driver.

FUNCTION TABLE
(each flip-flop)

INPUTS			OUTPUT
$\overline{OE}$	CLK	D	Q
L	↑	H	H
L	↑	L	L
L	H or L	X	Q_0
H	X	X	Z

logic diagram (positive logic)

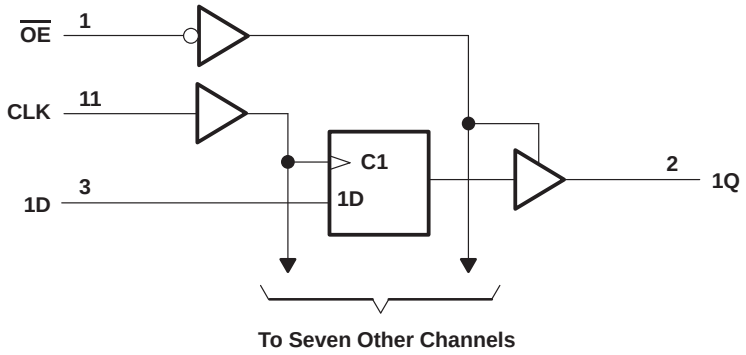

absolute maximum ratings over operating free-air temperature range (unless otherwise noted)†

Supply voltage range, V_{CC}	−0.5 V to 7 V
Input clamp current, I_{IK} ($V_I < 0$ or $V_I > V_{CC}$) (see Note 1)	±20 mA
Output clamp current, I_{OK} ($V_O < 0$ or $V_O > V_{CC}$) (see Note 1)	±20 mA
Continuous output current, I_O ($V_O = 0$ to V_{CC})	±35 mA
Continuous current through V_{CC} or GND	±70 mA
Package thermal impedance, θ_{JA} (see Note 2): DB package	70°C/W
DW package	58°C/W
N package	69°C/W
NS package	60°C/W
PW package	83°C/W
Storage temperature range, T_{stg}	−65°C to 150°C

† Stresses beyond those listed under “absolute maximum ratings” may cause permanent damage to the device. These are stress ratings only, and functional operation of the device at these or any other conditions beyond those indicated under “recommended operating conditions” is not implied. Exposure to absolute-maximum-rated conditions for extended periods may affect device reliability.

NOTES: 1. The input and output voltage ratings may be exceeded if the input and output current ratings are observed.
2. The package thermal impedance is calculated in accordance with JESD 51-7.

recommended operating conditions (see Note 3)

			SN54HC374			SN74HC374			UNIT
			MIN	NOM	MAX	MIN	NOM	MAX	
V_{CC}	Supply voltage		2	5	6	2	5	6	V
V_{IH}	High-level input voltage	V_{CC} = 2 V	1.5			1.5			V
		V_{CC} = 4.5 V	3.15			3.15			
		V_{CC} = 6 V	4.2			4.2			
V_{IL}	Low-level input voltage	V_{CC} = 2 V			0.5			0.5	V
		V_{CC} = 4.5 V			1.35			1.35	
		V_{CC} = 6 V			1.8			1.8	
V_I	Input voltage		0		V_{CC}	0		V_{CC}	V
V_O	Output voltage		0		V_{CC}	0		V_{CC}	V
$\Delta t/\Delta v$	Input transition rise/fall time	V_{CC} = 2 V			1000			1000	ns
		V_{CC} = 4.5 V			500			500	
		V_{CC} = 6 V			400			400	
T_A	Operating free-air temperature		−55		125	−40		85	°C

NOTE 3: All unused inputs of the device must be held at VCC or GND to ensure proper device operation. Refer to the TI application report, *Implications of Slow or Floating CMOS Inputs*, literature number SCBA004.

electrical characteristics over recommended operating free-air temperature range (unless otherwise noted)

PARAMETER	TEST CONDITIONS		V_{CC}	T_A = 25°C			SN54HC374		SN74HC374		UNIT
				MIN	TYP	MAX	MIN	MAX	MIN	MAX	
V_{OH}	$V_I = V_{IH}$ or V_{IL}	I_{OH} = −20 µA	2 V	1.9	1.998		1.9		1.9		V
			4.5 V	4.4	4.499		4.4		4.4		
			6 V	5.9	5.999		5.9		5.9		
		I_{OH} = −6 mA	4.5 V	3.98	4.3		3.7		3.84		
		I_{OH} = −7.8 mA	6 V	5.48	5.8		5.2		5.34		
V_{OL}	$V_I = V_{IH}$ or V_{IL}	I_{OL} = 20 µA	2 V		0.002	0.1		0.1		0.1	V
			4.5 V		0.001	0.1		0.1		0.1	
			6 V		0.001	0.1		0.1		0.1	
		I_{OL} = 6 mA	4.5 V		0.17	0.26		0.4		0.33	
		I_{OL} = 7.8 mA	6 V		0.15	0.26		0.4		0.33	
I_I	$V_I = V_{CC}$ or 0		6 V		±0.1	±100		±1000		±1000	nA
I_{OZ}	$V_O = V_{CC}$ or 0		6 V		±0.01	±0.5		±10		±5	µA
I_{CC}	$V_I = V_{CC}$ or 0,	I_O = 0	6 V			8		160		80	µA
C_i			2 V to 6 V		3	10		10		10	pF

timing requirements over recommended operating free-air temperature range (unless otherwise noted)

		V_{CC}	T_A = 25°C		SN54HC374		SN74HC374		UNIT
			MIN	MAX	MIN	MAX	MIN	MAX	
f_{clock}	Clock frequency	2 V		6		4		5	MHz
		4.5 V		30		20		24	
		6 V		35		24		28	
t_w	Pulse duration, CLK high or low	2 V	80		120		100		ns
		4.5 V	16		24		20		
		6 V	14		20		17		
t_{su}	Setup time, data before CLK↑	2 V	100		150		125		ns
		4.5 V	20		30		25		
		6 V	17		25		21		
t_h	Hold time, data after CLK↑	2 V	10		13		12		ns
		4.5 V	5		5		5		
		6 V	5		5		5		

switching characteristics over recommended operating free-air temperature range, C_L = 50 pF (unless otherwise noted) (see Figure 1)

PARAMETER	FROM (INPUT)	TO (OUTPUT)	V_{CC}	T_A = 25°C			SN54HC374		SN74HC374		UNIT
				MIN	TYP	MAX	MIN	MAX	MIN	MAX	
f_{max}			2 V	6	12		4		5		MHz
			4.5 V	30	60		20		24		
			6 V	35	70		24		28		
t_{pd}	CLK	Any Q	2 V		63	180		270		225	ns
			4.5 V		17	36		54		45	
			6 V		15	31		46		38	
t_{en}	$\overline{OE}$	Any Q	2 V		60	150		225		190	ns
			4.5 V		16	30		45		38	
			6 V		14	26		38		32	
t_{dis}	$\overline{OE}$	Any Q	2 V		36	150		225		190	ns
			4.5 V		17	30		45		38	
			6 V		16	26		38		32	
t_t		Any Q	2 V		28	60		90		75	ns
			4.5 V		8	12		18		15	
			6 V		6	10		15		13	

switching characteristics over recommended operating free-air temperature range, C_L = 150 pF (unless otherwise noted) (see Figure 1)

PARAMETER	FROM (INPUT)	TO (OUTPUT)	V_{CC}	T_A = 25°C			SN54HC374		SN74HC374		UNIT
				MIN	TYP	MAX	MIN	MAX	MIN	MAX	
f_{max}			2 V	6	12				5		MHz
			4.5 V	30	60				24		
			6 V	35	70				28		
t_{pd}	CLK	Any Q	2 V		80	230		345		290	ns
			4.5 V		22	46		69		58	
			6 V		19	39		58		49	
t_{en}	$\overline{OE}$	Any Q	2 V		70	200		300		250	ns
			4.5 V		25	40		60		50	
			6 V		22	34		51		43	
t_t		Any Q	2 V		45	210		315		265	ns
			4.5 V		17	42		63		53	
			6 V		13	36		53		45	

operating characteristics, T_A = 25°C

PARAMETER		TEST CONDITIONS	TYP	UNIT
C_{pd}	Power dissipation capacitance per flip-flop	No load	100	pF

PARAMETER MEASUREMENT INFORMATION

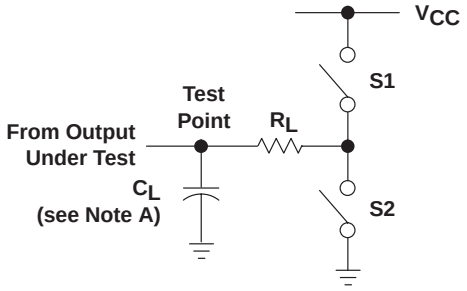

LOAD CIRCUIT

PARAMETER		R_L	C_L	S1	S2
t_{en}	t_{PZH}	1 kΩ	50 pF or 150 pF	Open	Closed
	t_{PZL}			Closed	Open
t_{dis}	t_{PHZ}	1 kΩ	50 pF	Open	Closed
	t_{PLZ}			Closed	Open
t_{pd} or t_t		−−	50 pF or 150 pF	Open	Open

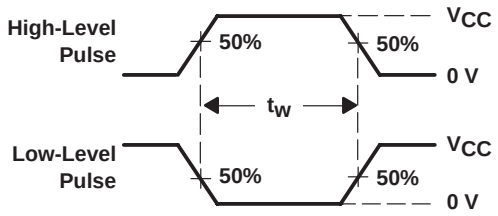

VOLTAGE WAVEFORMS
PULSE DURATIONS

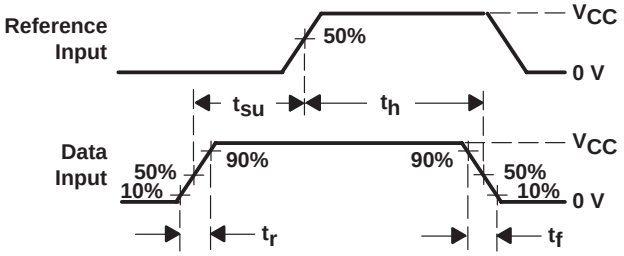

VOLTAGE WAVEFORMS
SETUP AND HOLD AND INPUT RISE AND FALL TIMES

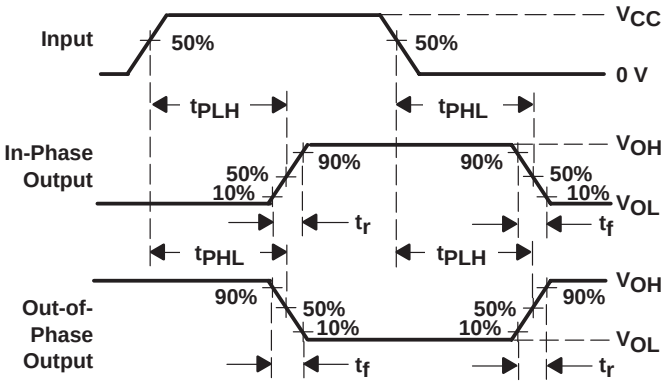

VOLTAGE WAVEFORMS
PROPAGATION DELAY AND OUTPUT TRANSITION TIMES

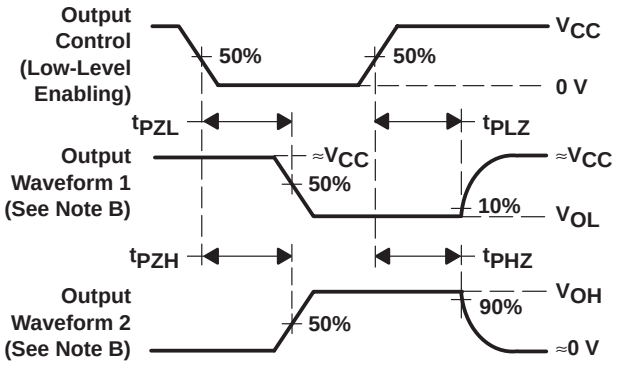

VOLTAGE WAVEFORMS
ENABLE AND DISABLE TIMES FOR 3-STATE OUTPUTS

NOTES:
A. C_L includes probe and test-fixture capacitance.
B. Waveform 1 is for an output with internal conditions such that the output is low except when disabled by the output control. Waveform 2 is for an output with internal conditions such that the output is high except when disabled by the output control.
C. Phase relationships between waveforms were chosen arbitrarily. All input pulses are supplied by generators having the following characteristics: PRR ≤ 1 MHz, Z_O = 50 Ω, t_r = 6 ns, t_f = 6 ns.
D. For clock inputs, f_{max} is measured when the input duty cycle is 50%.
E. The outputs are measured one at a time with one input transition per measurement.
F. t_{PLZ} and t_{PHZ} are the same as t_{dis}.
G. t_{PZL} and t_{PZH} are the same as t_{en}.
H. t_{PLH} and t_{PHL} are the same as t_{pd}.

Figure 1. Load Circuit and Voltage Waveforms

PACKAGING INFORMATION

Orderable Device	Status (1)	Package Type	Package Drawing	Pins	Package Qty	Eco Plan (2)	Lead/Ball Finish	MSL Peak Temp (3)	Op Temp (°C)	Top-Side Markings (4)	Samples
5962-8407101VRA	ACTIVE	CDIP	J	20	1	TBD	A42	N / A for Pkg Type	-55 to 125	5962-8407101VR A SNV54HC374J	Samples
5962-8407101VSA	ACTIVE	CFP	W	20	1	TBD	Call TI	N / A for Pkg Type	-55 to 125	5962-8407101VS A SNV54HC374W	Samples
84071012A	ACTIVE	LCCC	FK	20	1	TBD	Call TI	Call TI	-55 to 125	84071012A SNJ54HC 374FK	Samples
8407101RA	ACTIVE	CDIP	J	20	1	TBD	Call TI	Call TI	-55 to 125	8407101RA SNJ54HC374J	Samples
8407101SA	ACTIVE	CFP	W	20	1	TBD	Call TI	Call TI	-55 to 125	8407101SA SNJ54HC374W	Samples
JM38510/65602BRA	ACTIVE	CDIP	J	20	1	TBD	A42	N / A for Pkg Type	-55 to 125	JM38510/ 65602BRA	Samples
M38510/65602BRA	ACTIVE	CDIP	J	20	1	TBD	A42	N / A for Pkg Type	-55 to 125	JM38510/ 65602BRA	Samples
SN54HC374J	ACTIVE	CDIP	J	20	1	TBD	A42	N / A for Pkg Type	-55 to 125	SN54HC374J	Samples
SN74HC374DBR	ACTIVE	SSOP	DB	20	2000	Green (RoHS & no Sb/Br)	CU NIPDAU	Level-1-260C-UNLIM	-40 to 85	HC374	Samples
SN74HC374DBRE4	ACTIVE	SSOP	DB	20	2000	Green (RoHS & no Sb/Br)	CU NIPDAU	Level-1-260C-UNLIM	-40 to 85	HC374	Samples
SN74HC374DBRG4	ACTIVE	SSOP	DB	20	2000	Green (RoHS & no Sb/Br)	CU NIPDAU	Level-1-260C-UNLIM	-40 to 85	HC374	Samples
SN74HC374DW	ACTIVE	SOIC	DW	20	25	Green (RoHS & no Sb/Br)	CU NIPDAU	Level-1-260C-UNLIM	-40 to 85	HC374	Samples
SN74HC374DWE4	ACTIVE	SOIC	DW	20	25	Green (RoHS & no Sb/Br)	CU NIPDAU	Level-1-260C-UNLIM	-40 to 85	HC374	Samples
SN74HC374DWG4	ACTIVE	SOIC	DW	20	25	Green (RoHS & no Sb/Br)	CU NIPDAU	Level-1-260C-UNLIM	-40 to 85	HC374	Samples
SN74HC374DWR	ACTIVE	SOIC	DW	20	2000	Green (RoHS & no Sb/Br)	CU NIPDAU	Level-1-260C-UNLIM	-40 to 85	HC374	Samples
SN74HC374DWRE4	ACTIVE	SOIC	DW	20	2000	Green (RoHS & no Sb/Br)	CU NIPDAU	Level-1-260C-UNLIM	-40 to 85	HC374	Samples

Orderable Device	Status (1)	Package Type	Package Drawing	Pins	Package Qty	Eco Plan (2)	Lead/Ball Finish	MSL Peak Temp (3)	Op Temp (°C)	Top-Side Markings (4)	Samples
SN74HC374DWRG4	ACTIVE	SOIC	DW	20	2000	Green (RoHS & no Sb/Br)	CU NIPDAU	Level-1-260C-UNLIM	-40 to 85	HC374	Samples
SN74HC374N	ACTIVE	PDIP	N	20	20	Pb-Free (RoHS)	CU NIPDAU	N / A for Pkg Type	-40 to 85	SN74HC374N	Samples
SN74HC374N3	OBSOLETE	PDIP	N	20		TBD	Call TI	Call TI	-40 to 85		
SN74HC374NE4	ACTIVE	PDIP	N	20	20	Pb-Free (RoHS)	CU NIPDAU	N / A for Pkg Type	-40 to 85	SN74HC374N	Samples
SN74HC374NSR	ACTIVE	SO	NS	20	2000	Green (RoHS & no Sb/Br)	CU NIPDAU	Level-1-260C-UNLIM	-40 to 85	HC374	Samples
SN74HC374NSRG4	ACTIVE	SO	NS	20	2000	Green (RoHS & no Sb/Br)	CU NIPDAU	Level-1-260C-UNLIM	-40 to 85	HC374	Samples
SN74HC374PWLE	OBSOLETE	TSSOP	PW	20		TBD	Call TI	Call TI	-40 to 85		
SN74HC374PWR	ACTIVE	TSSOP	PW	20	2000	Green (RoHS & no Sb/Br)	CU NIPDAU	Level-1-260C-UNLIM	-40 to 85	HC374	Samples
SN74HC374PWRE4	ACTIVE	TSSOP	PW	20	2000	Green (RoHS & no Sb/Br)	CU NIPDAU	Level-1-260C-UNLIM	-40 to 85	HC374	Samples
SN74HC374PWRG4	ACTIVE	TSSOP	PW	20	2000	Green (RoHS & no Sb/Br)	CU NIPDAU	Level-1-260C-UNLIM	-40 to 85	HC374	Samples
SN74HC374PWT	ACTIVE	TSSOP	PW	20	250	Green (RoHS & no Sb/Br)	CU NIPDAU	Level-1-260C-UNLIM	-40 to 85	HC374	Samples
SN74HC374PWTE4	ACTIVE	TSSOP	PW	20	250	Green (RoHS & no Sb/Br)	CU NIPDAU	Level-1-260C-UNLIM	-40 to 85	HC374	Samples
SN74HC374PWTG4	ACTIVE	TSSOP	PW	20	250	Green (RoHS & no Sb/Br)	CU NIPDAU	Level-1-260C-UNLIM	-40 to 85	HC374	Samples
SNJ54HC374FK	ACTIVE	LCCC	FK	20	1	TBD	POST-PLATE	N / A for Pkg Type	-55 to 125	84071012A SNJ54HC 374FK	Samples
SNJ54HC374J	ACTIVE	CDIP	J	20	1	TBD	A42	N / A for Pkg Type	-55 to 125	8407101RA SNJ54HC374J	Samples
SNJ54HC374W	ACTIVE	CFP	W	20	1	TBD	Call TI	N / A for Pkg Type	-55 to 125	8407101SA SNJ54HC374W	Samples

(1) The marketing status values are defined as follows:
ACTIVE: Product device recommended for new designs.
LIFEBUY: TI has announced that the device will be discontinued, and a lifetime-buy period is in effect.
NRND: Not recommended for new designs. Device is in production to support existing customers, but TI does not recommend using this part in a new design.
PREVIEW: Device has been announced but is not in production. Samples may or may not be available.

OBSOLETE: TI has discontinued the production of the device.

(2) Eco Plan - The planned eco-friendly classification: Pb-Free (RoHS), Pb-Free (RoHS Exempt), or Green (RoHS & no Sb/Br) - please check http://www.ti.com/productcontent for the latest availability information and additional product content details.
TBD: The Pb-Free/Green conversion plan has not been defined.
Pb-Free (RoHS): TI's terms "Lead-Free" or "Pb-Free" mean semiconductor products that are compatible with the current RoHS requirements for all 6 substances, including the requirement that lead not exceed 0.1% by weight in homogeneous materials. Where designed to be soldered at high temperatures, TI Pb-Free products are suitable for use in specified lead-free processes.
Pb-Free (RoHS Exempt): This component has a RoHS exemption for either 1) lead-based flip-chip solder bumps used between the die and package, or 2) lead-based die adhesive used between the die and leadframe. The component is otherwise considered Pb-Free (RoHS compatible) as defined above.
Green (RoHS & no Sb/Br): TI defines "Green" to mean Pb-Free (RoHS compatible), and free of Bromine (Br) and Antimony (Sb) based flame retardants (Br or Sb do not exceed 0.1% by weight in homogeneous material)

(3) MSL, Peak Temp. -- The Moisture Sensitivity Level rating according to the JEDEC industry standard classifications, and peak solder temperature.

(4) Only one of markings shown within the brackets will appear on the physical device.

Important Information and Disclaimer: The information provided on this page represents TI's knowledge and belief as of the date that it is provided. TI bases its knowledge and belief on information provided by third parties, and makes no representation or warranty as to the accuracy of such information. Efforts are underway to better integrate information from third parties. TI has taken and continues to take reasonable steps to provide representative and accurate information but may not have conducted destructive testing or chemical analysis on incoming materials and chemicals. TI and TI suppliers consider certain information to be proprietary, and thus CAS numbers and other limited information may not be available for release.

In no event shall TI's liability arising out of such information exceed the total purchase price of the TI part(s) at issue in this document sold by TI to Customer on an annual basis.

OTHER QUALIFIED VERSIONS OF SN54HC374, SN54HC374-SP, SN74HC374 :

- Catalog: SN74HC374, SN54HC374
- Military: SN54HC374
- Space: SN54HC374-SP

NOTE: Qualified Version Definitions:

- Catalog - TI's standard catalog product
- Military - QML certified for Military and Defense Applications
- Space - Radiation tolerant, ceramic packaging and qualified for use in Space-based application

TAPE AND REEL INFORMATION

REEL DIMENSIONS

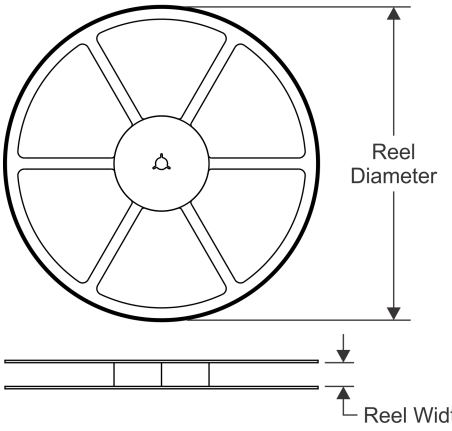

TAPE DIMENSIONS

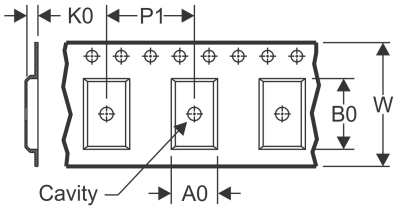

A0	Dimension designed to accommodate the component width
B0	Dimension designed to accommodate the component length
K0	Dimension designed to accommodate the component thickness
W	Overall width of the carrier tape
P1	Pitch between successive cavity centers

QUADRANT ASSIGNMENTS FOR PIN 1 ORIENTATION IN TAPE

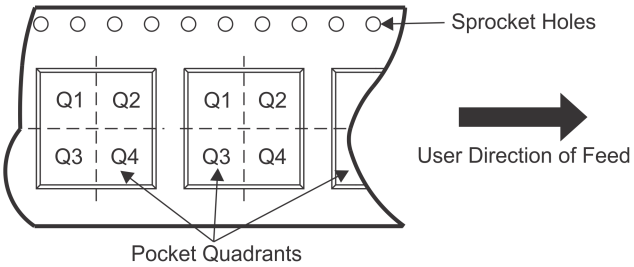

*All dimensions are nominal

Device	Package Type	Package Drawing	Pins	SPQ	Reel Diameter (mm)	Reel Width W1 (mm)	A0 (mm)	B0 (mm)	K0 (mm)	P1 (mm)	W (mm)	Pin1 Quadrant
SN74HC374DBR	SSOP	DB	20	2000	330.0	16.4	8.2	7.5	2.5	12.0	16.0	Q1
SN74HC374DWR	SOIC	DW	20	2000	330.0	24.4	10.8	13.3	2.7	12.0	24.0	Q1
SN74HC374DWR	SOIC	DW	20	2000	330.0	24.4	10.8	13.0	2.7	12.0	24.0	Q1
SN74HC374NSR	SO	NS	20	2000	330.0	24.4	8.2	13.0	2.5	12.0	24.0	Q1
SN74HC374PWR	TSSOP	PW	20	2000	330.0	16.4	6.95	7.1	1.6	8.0	16.0	Q1
SN74HC374PWT	TSSOP	PW	20	250	330.0	16.4	6.95	7.1	1.6	8.0	16.0	Q1

TAPE AND REEL BOX DIMENSIONS

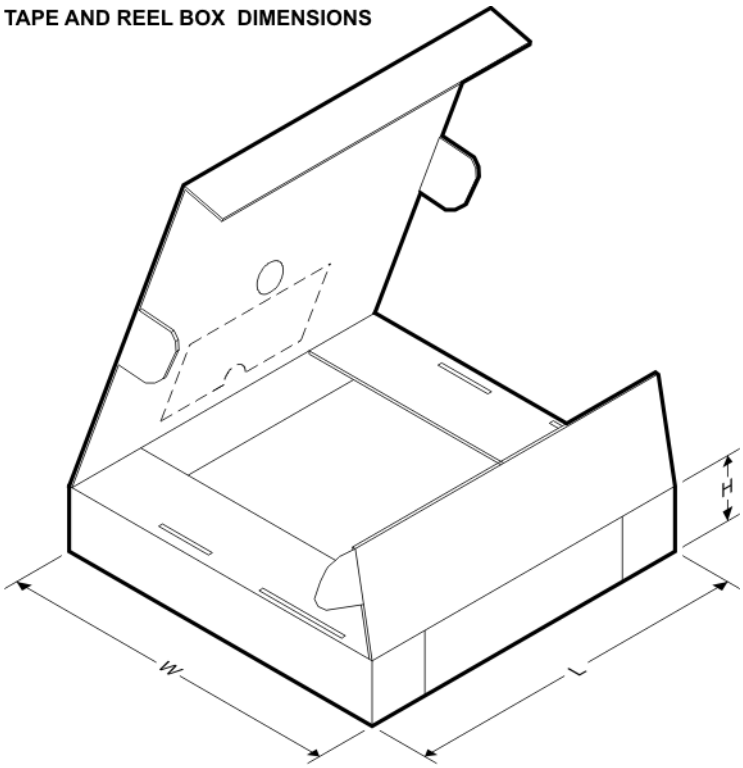

*All dimensions are nominal

Device	Package Type	Package Drawing	Pins	SPQ	Length (mm)	Width (mm)	Height (mm)
SN74HC374DBR	SSOP	DB	20	2000	367.0	367.0	38.0
SN74HC374DWR	SOIC	DW	20	2000	367.0	367.0	45.0
SN74HC374DWR	SOIC	DW	20	2000	367.0	367.0	45.0
SN74HC374NSR	SO	NS	20	2000	367.0	367.0	45.0
SN74HC374PWR	TSSOP	PW	20	2000	367.0	367.0	38.0
SN74HC374PWT	TSSOP	PW	20	250	367.0	367.0	38.0

J (R–GDIP–T**) CERAMIC DUAL IN–LINE PACKAGE

14 LEADS SHOWN

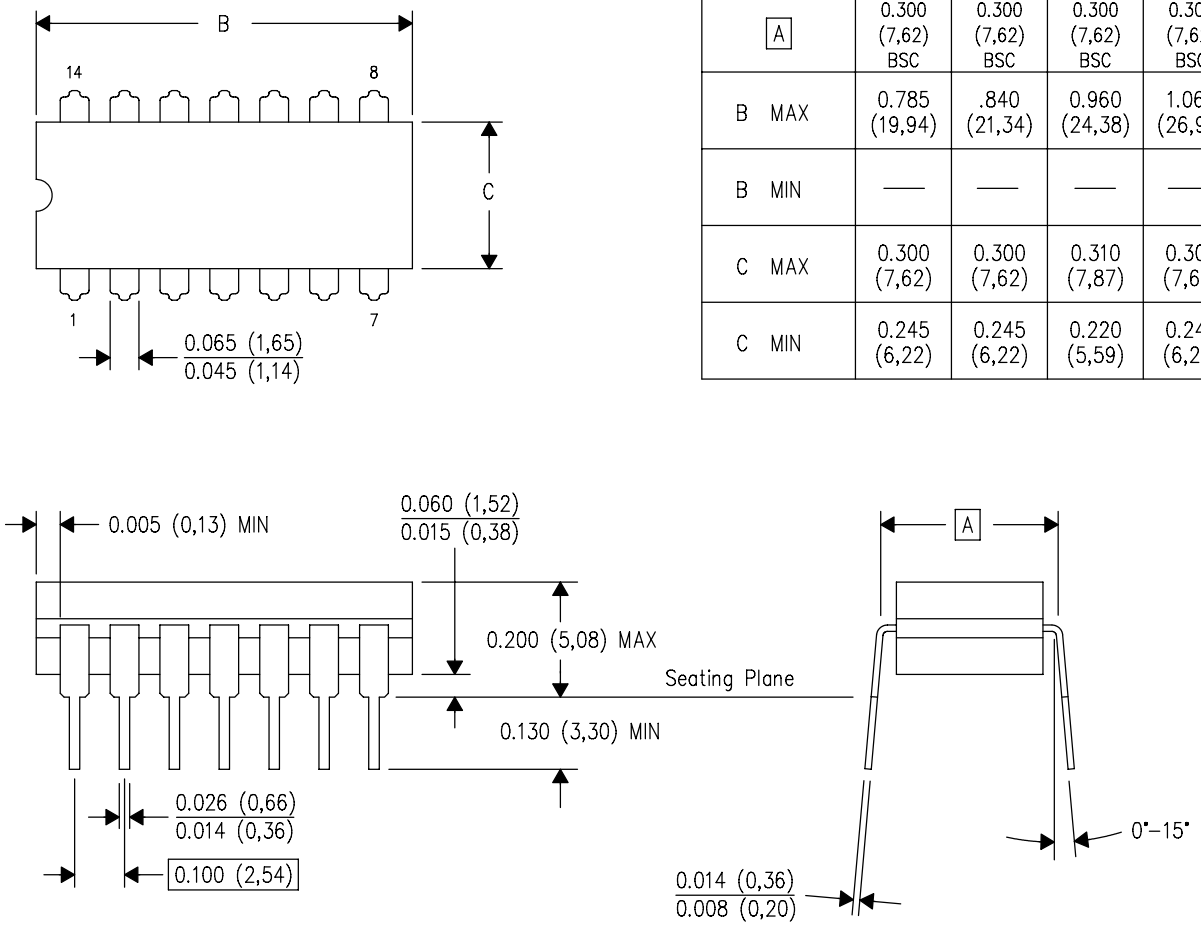

DIM \ PINS **	14	16	18	20
A	0.300 (7,62) BSC	0.300 (7,62) BSC	0.300 (7,62) BSC	0.300 (7,62) BSC
B MAX	0.785 (19,94)	.840 (21,34)	0.960 (24,38)	1.060 (26,92)
B MIN	—	—	—	—
C MAX	0.300 (7,62)	0.300 (7,62)	0.310 (7,87)	0.300 (7,62)
C MIN	0.245 (6,22)	0.245 (6,22)	0.220 (5,59)	0.245 (6,22)

4040083/F 03/03

NOTES:
- A. All linear dimensions are in inches (millimeters).
- B. This drawing is subject to change without notice.
- C. This package is hermetically sealed with a ceramic lid using glass frit.
- D. Index point is provided on cap for terminal identification only on press ceramic glass frit seal only.
- E. Falls within MIL STD 1835 GDIP1–T14, GDIP1–T16, GDIP1–T18 and GDIP1–T20.

W (R–GDFP–F20) CERAMIC DUAL FLATPACK

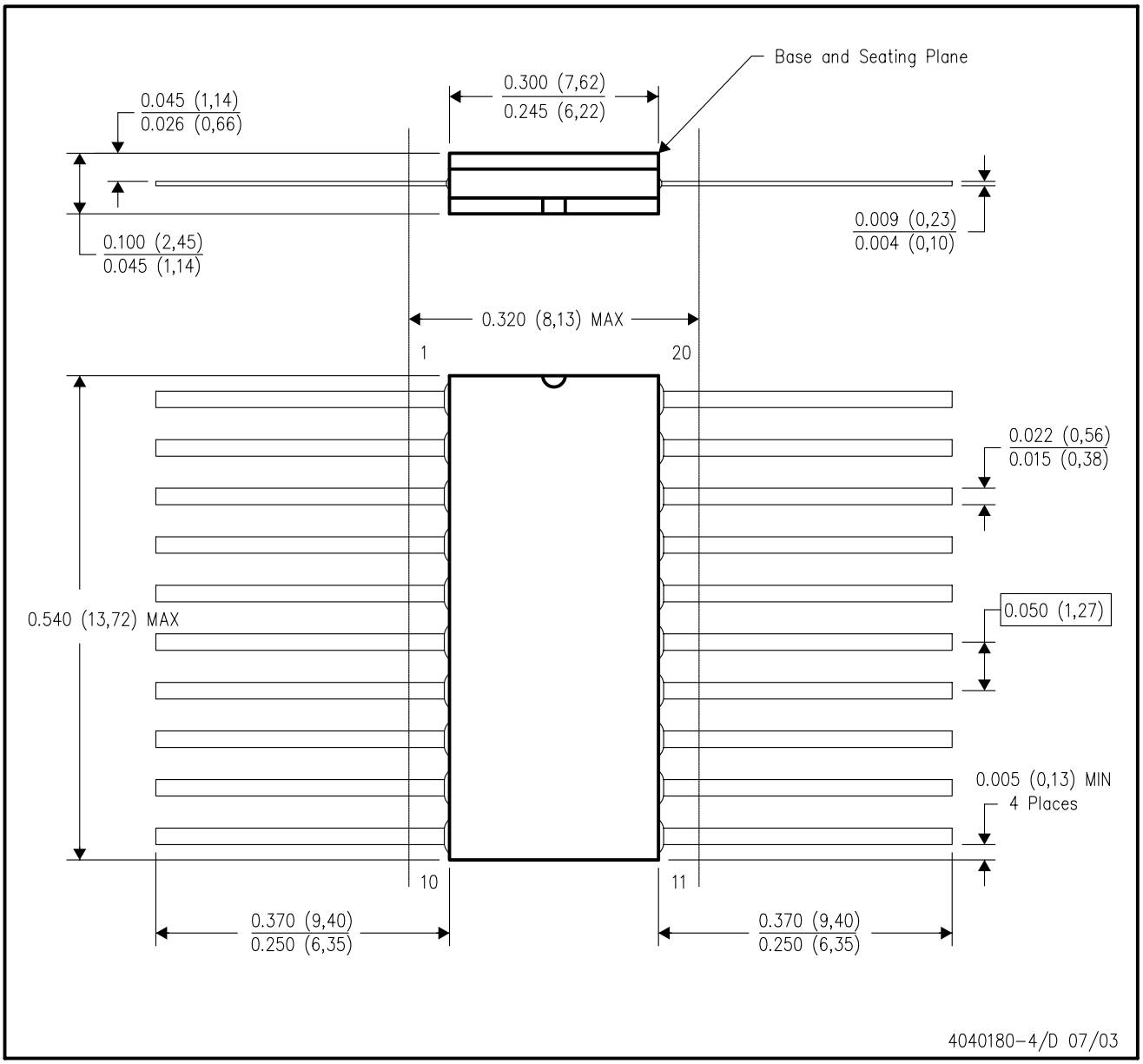

NOTES:
A. All linear dimensions are in inches (millimeters).
B. This drawing is subject to change without notice.
C. This package can be hermetically sealed with a ceramic lid using glass frit.
D. Index point is provided on cap for terminal identification only.
E. Falls within Mil–Std 1835 GDFP2–F20

FK (S–CQCC–N**) LEADLESS CERAMIC CHIP CARRIER

28 TERMINAL SHOWN

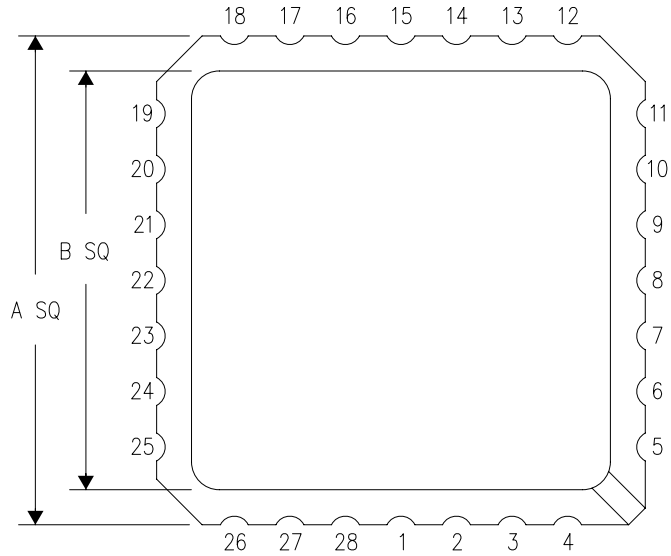

NO. OF TERMINALS **	A		B	
	MIN	MAX	MIN	MAX
20	0.342 (8,69)	0.358 (9,09)	0.307 (7,80)	0.358 (9,09)
28	0.442 (11,23)	0.458 (11,63)	0.406 (10,31)	0.458 (11,63)
44	0.640 (16,26)	0.660 (16,76)	0.495 (12,58)	0.560 (14,22)
52	0.740 (18,78)	0.761 (19,32)	0.495 (12,58)	0.560 (14,22)
68	0.938 (23,83)	0.962 (24,43)	0.850 (21,6)	0.858 (21,8)
84	1.141 (28,99)	1.165 (29,59)	1.047 (26,6)	1.063 (27,0)

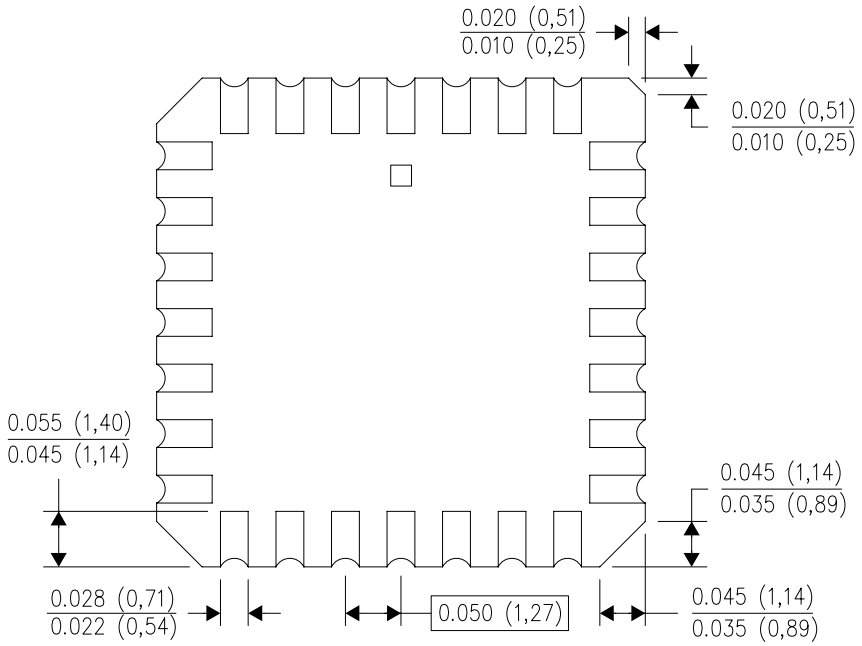

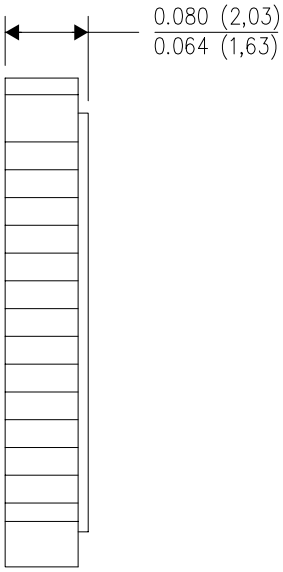

4040140/D 01/11

NOTES:
A. All linear dimensions are in inches (millimeters).
B. This drawing is subject to change without notice.
C. This package can be hermetically sealed with a metal lid.
D. Falls within JEDEC MS–004

N (R–PDIP–T**) PLASTIC DUAL–IN–LINE PACKAGE

16 PINS SHOWN

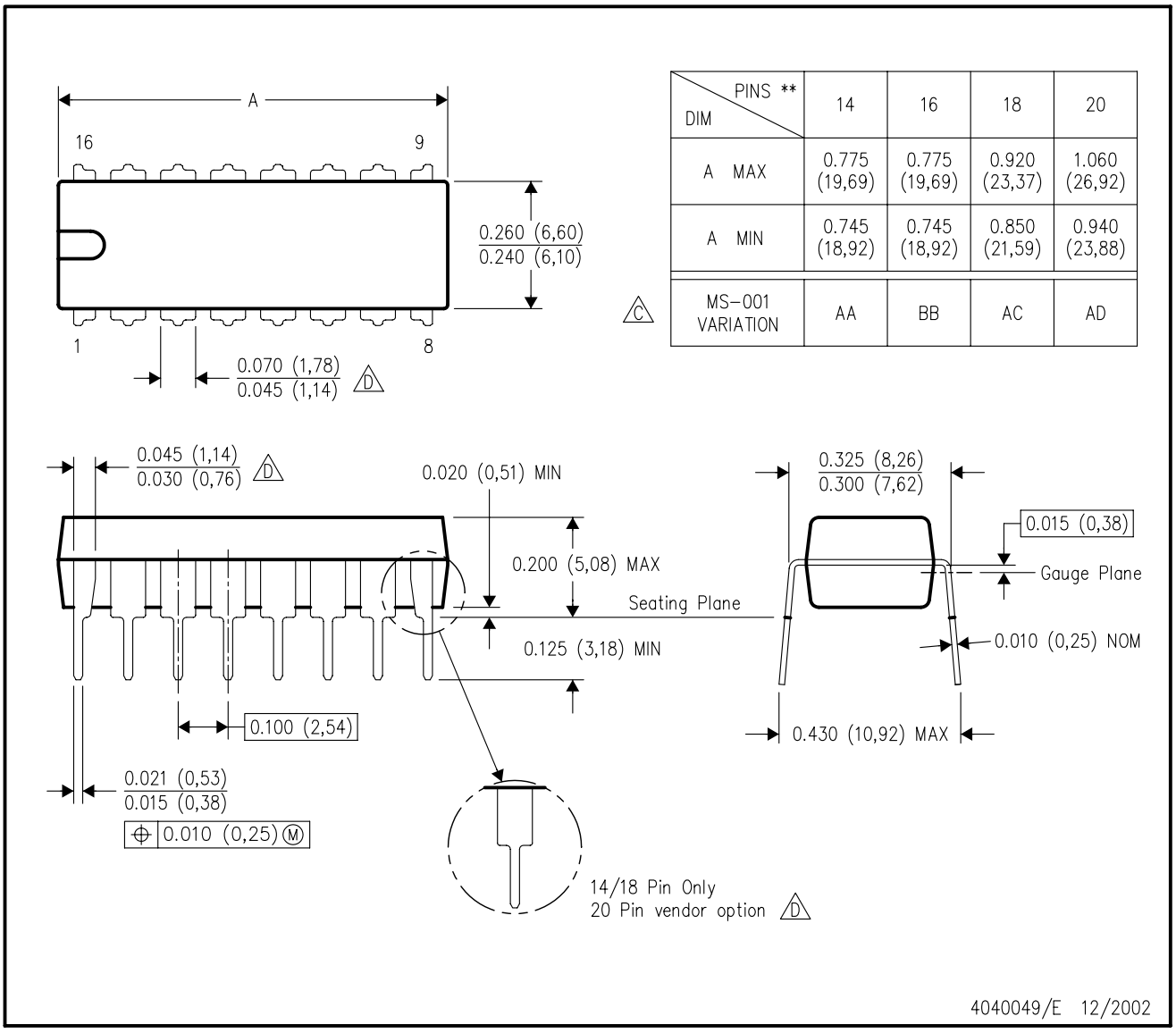

DIM \ PINS **	14	16	18	20
A MAX	0.775 (19,69)	0.775 (19,69)	0.920 (23,37)	1.060 (26,92)
A MIN	0.745 (18,92)	0.745 (18,92)	0.850 (21,59)	0.940 (23,88)
MS–001 VARIATION (C)	AA	BB	AC	AD

NOTES:
A. All linear dimensions are in inches (millimeters).
B. This drawing is subject to change without notice.
C. Falls within JEDEC MS–001, except 18 and 20 pin minimum body length (Dim A).
D. The 20 pin end lead shoulder width is a vendor option, either half or full width.

DW (R–PDSO–G20) PLASTIC SMALL OUTLINE

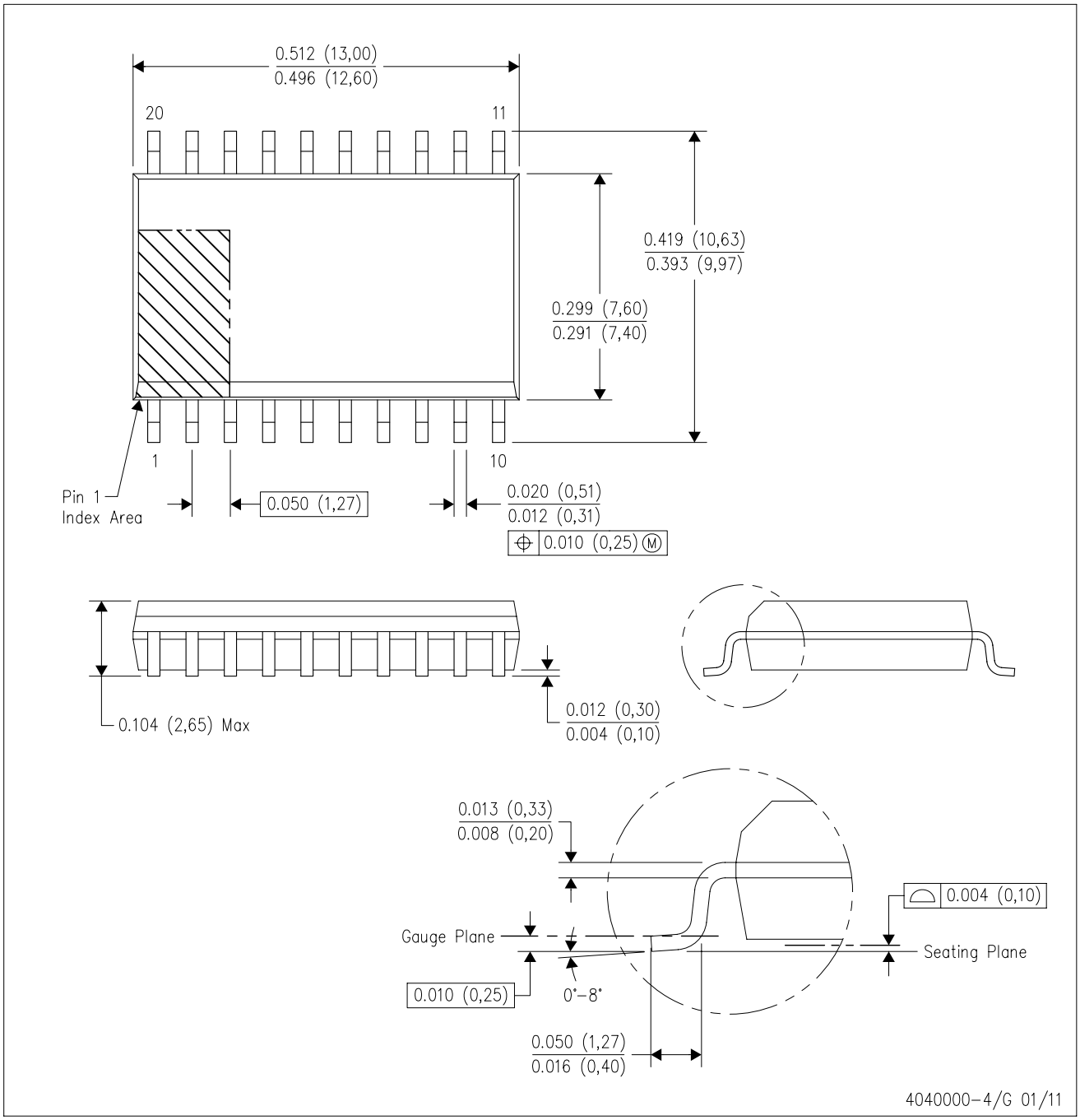

NOTES:
A. All linear dimensions are in inches (millimeters). Dimensioning and tolerancing per ASME Y14.5M–1994.
B. This drawing is subject to change without notice.
C. Body dimensions do not include mold flash or protrusion not to exceed 0.006 (0,15).
D. Falls within JEDEC MS–013 variation AC.

DW (R–PDSO–G20) PLASTIC SMALL OUTLINE

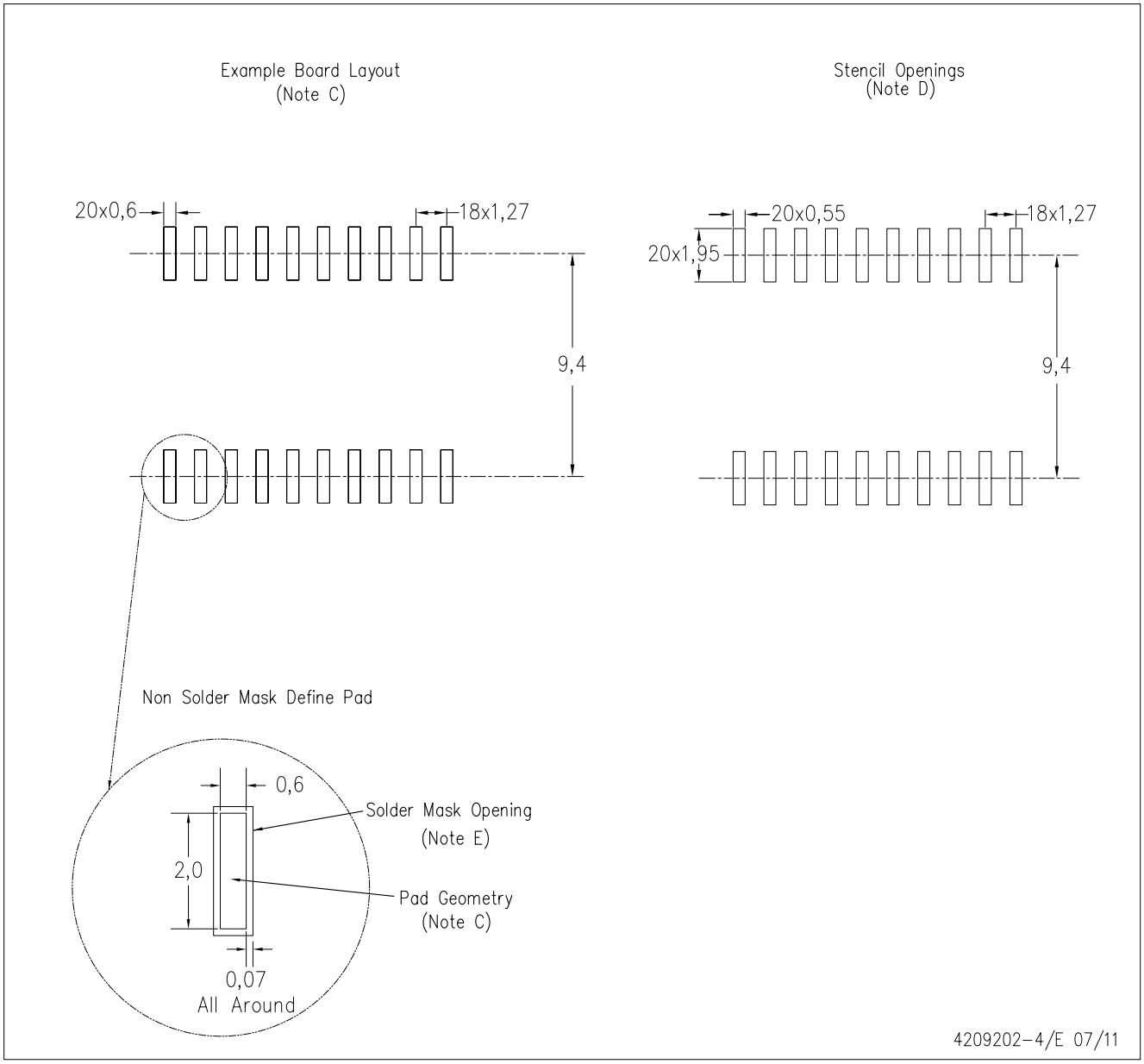

NOTES:
A. All linear dimensions are in millimeters.
B. This drawing is subject to change without notice.
C. Refer to IPC7351 for alternate board design.
D. Laser cutting apertures with trapezoidal walls and also rounding corners will offer better paste release. Customers should contact their board assembly site for stencil design recommendations. Refer to IPC–7525
E. Customers should contact their board fabrication site for solder mask tolerances between and around signal pads.

PW (R-PDSO-G20) PLASTIC SMALL OUTLINE

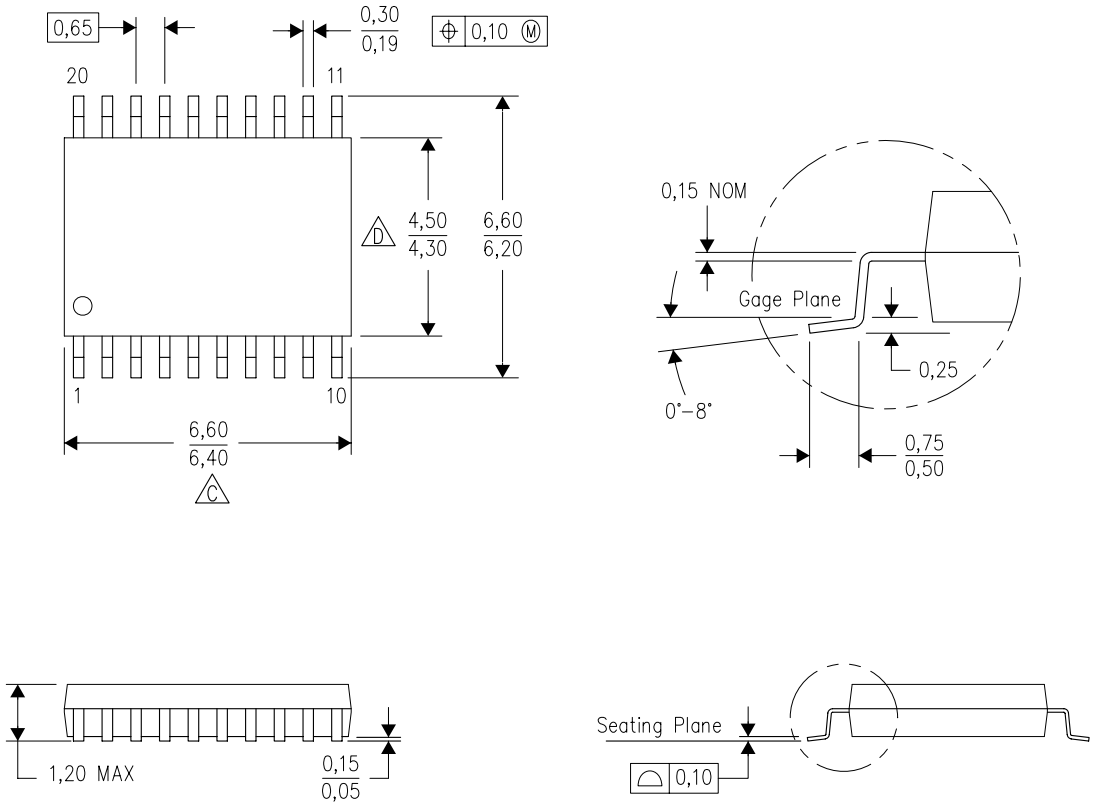

4040064-5/G 02/11

NOTES:
A. All linear dimensions are in millimeters. Dimensioning and tolerancing per ASME Y14.5M-1994.
B. This drawing is subject to change without notice.
C. Body length does not include mold flash, protrusions, or gate burrs. Mold flash, protrusions, or gate burrs shall not exceed 0,15 each side.
D. Body width does not include interlead flash. Interlead flash shall not exceed 0,25 each side.
E. Falls within JEDEC MO-153

PW (R-PDSO-G20) PLASTIC SMALL OUTLINE

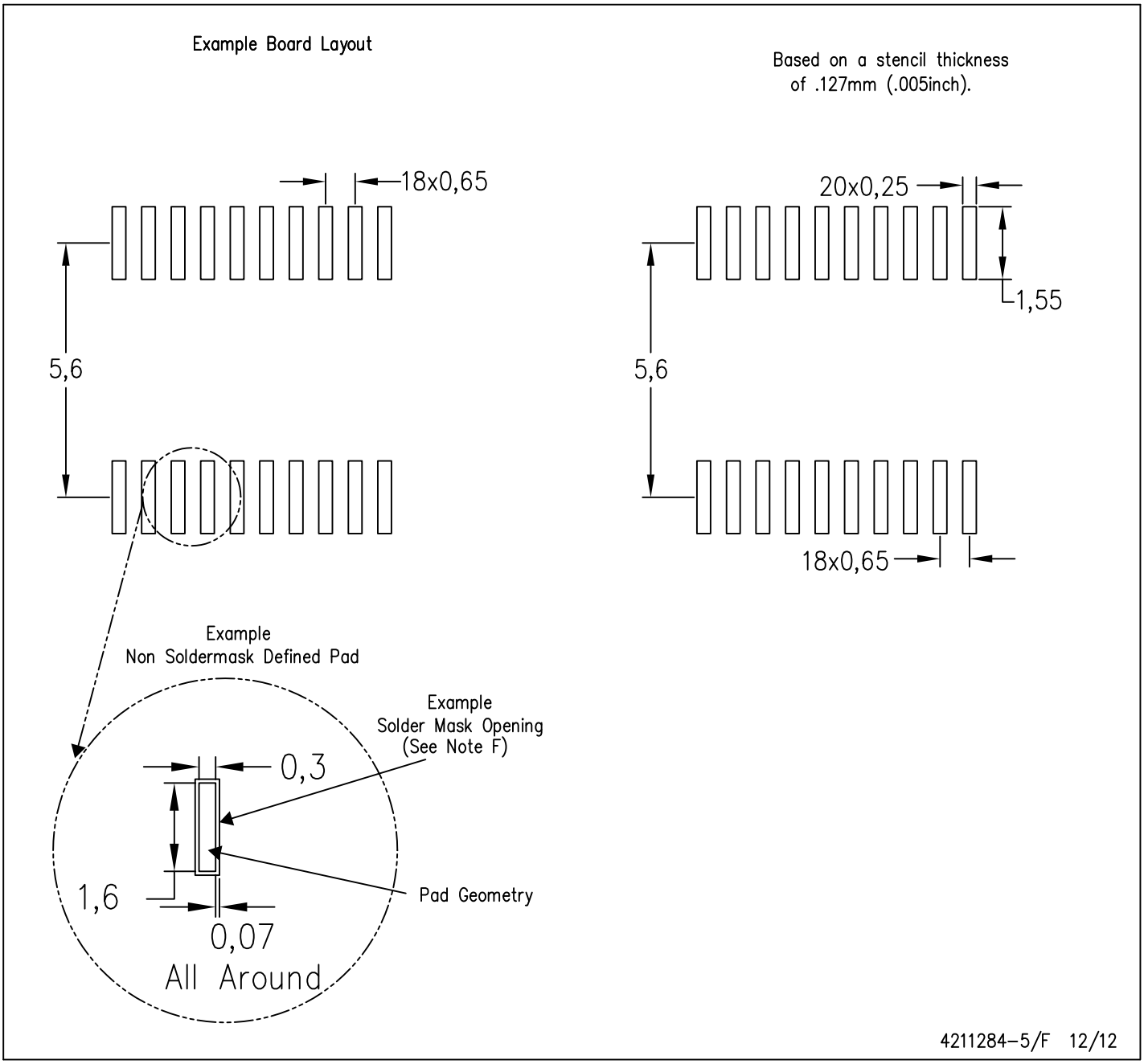

NOTES:
A. All linear dimensions are in millimeters.
B. This drawing is subject to change without notice.
C. Publication IPC-7351 is recommended for alternate design.
D. Laser cutting apertures with trapezoidal walls and also rounding corners will offer better paste release. Customers should contact their board assembly site for stencil design recommendations. Refer to IPC-7525 for other stencil recommendations.
E. Customers should contact their board fabrication site for solder mask tolerances between and around signal pads.

MECHANICAL DATA

NS (R-PDSO-G)** **PLASTIC SMALL-OUTLINE PACKAGE**

14-PINS SHOWN

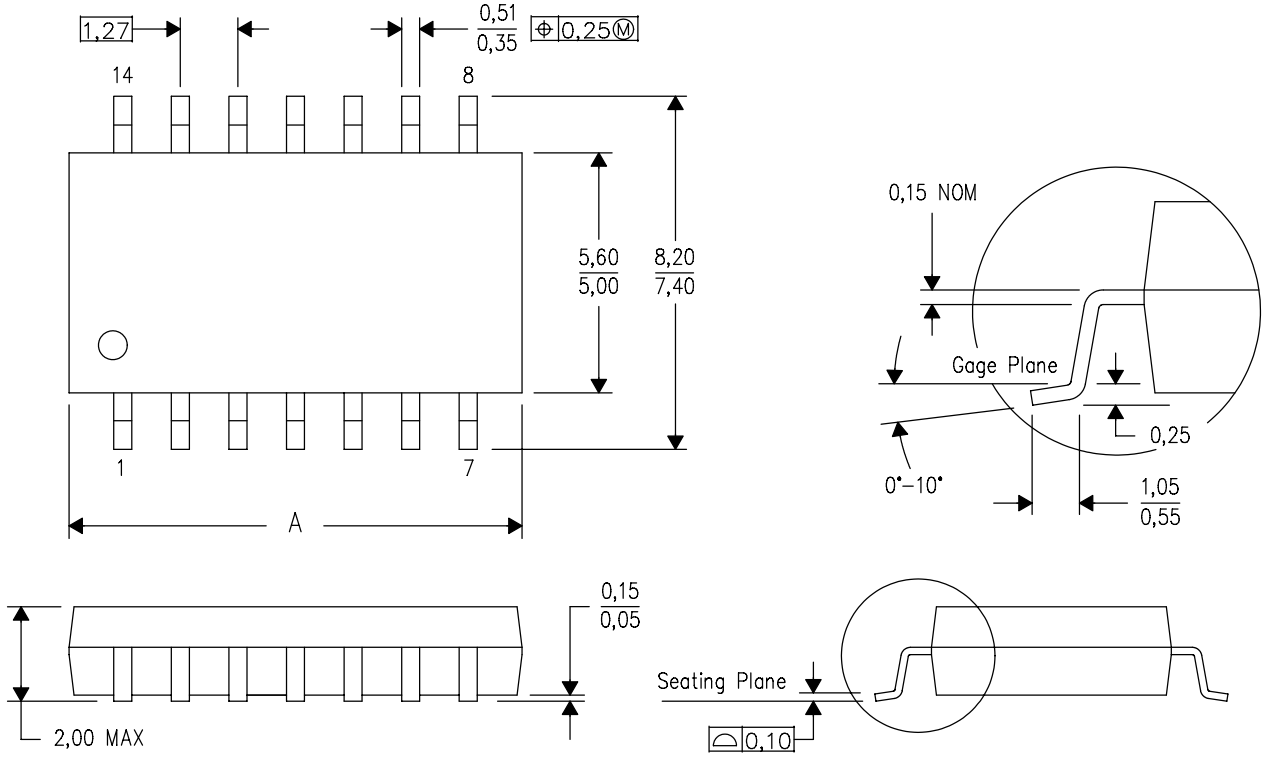

DIM \ PINS **	14	16	20	24
A MAX	10,50	10,50	12,90	15,30
A MIN	9,90	9,90	12,30	14,70

4040062/C 03/03

NOTES:
A. All linear dimensions are in millimeters.
B. This drawing is subject to change without notice.
C. Body dimensions do not include mold flash or protrusion, not to exceed 0,15.

DB (R-PDSO-G)** **PLASTIC SMALL-OUTLINE**

28 PINS SHOWN

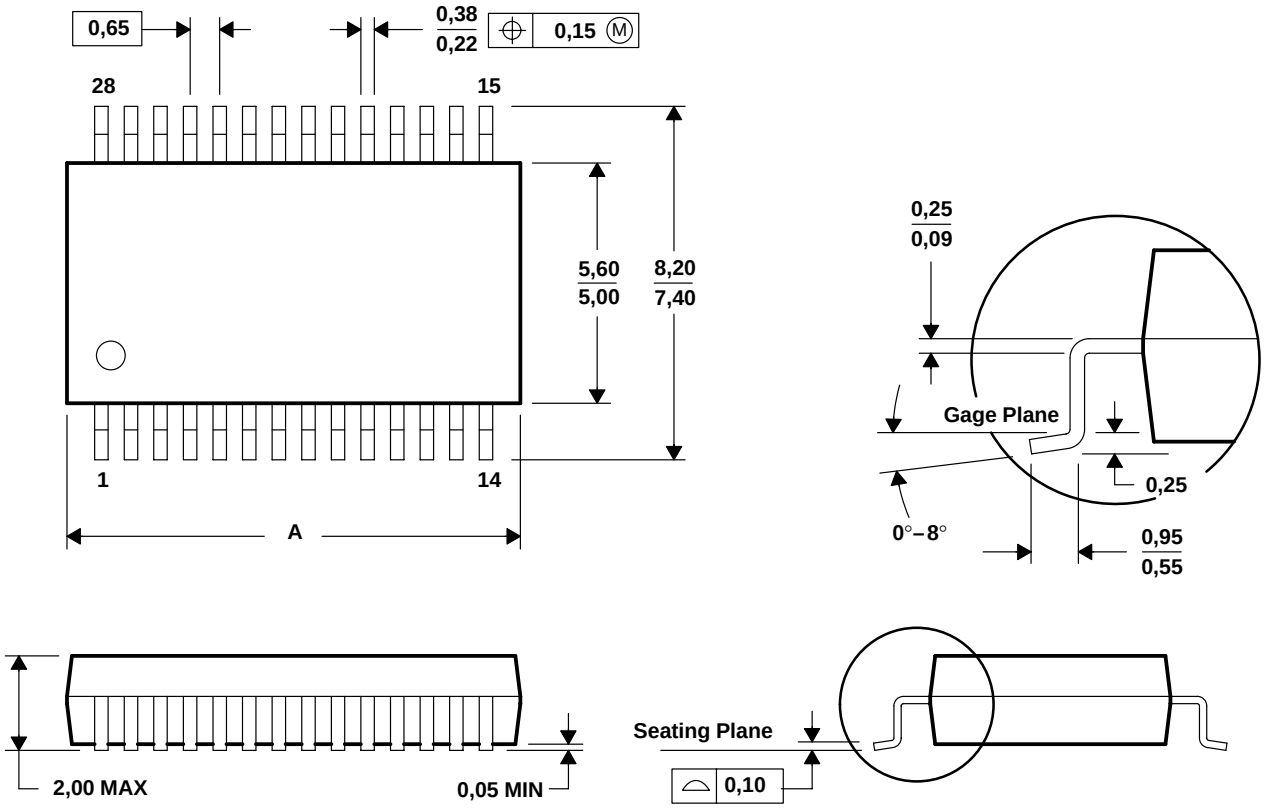

DIM \ PINS **	14	16	20	24	28	30	38
A MAX	6,50	6,50	7,50	8,50	10,50	10,50	12,90
A MIN	5,90	5,90	6,90	7,90	9,90	9,90	12,30

4040065 /E 12/01

NOTES: A. All linear dimensions are in millimeters.
B. This drawing is subject to change without notice.
C. Body dimensions do not include mold flash or protrusion not to exceed 0,15.
D. Falls within JEDEC MO-150

IMPORTANT NOTICE

Texas Instruments Incorporated and its subsidiaries (TI) reserve the right to make corrections, enhancements, improvements and other changes to its semiconductor products and services per JESD46, latest issue, and to discontinue any product or service per JESD48, latest issue. Buyers should obtain the latest relevant information before placing orders and should verify that such information is current and complete. All semiconductor products (also referred to herein as “components”) are sold subject to TI’s terms and conditions of sale supplied at the time of order acknowledgment.

TI warrants performance of its components to the specifications applicable at the time of sale, in accordance with the warranty in TI’s terms and conditions of sale of semiconductor products. Testing and other quality control techniques are used to the extent TI deems necessary to support this warranty. Except where mandated by applicable law, testing of all parameters of each component is not necessarily performed.

TI assumes no liability for applications assistance or the design of Buyers’ products. Buyers are responsible for their products and applications using TI components. To minimize the risks associated with Buyers’ products and applications, Buyers should provide adequate design and operating safeguards.

TI does not warrant or represent that any license, either express or implied, is granted under any patent right, copyright, mask work right, or other intellectual property right relating to any combination, machine, or process in which TI components or services are used. Information published by TI regarding third-party products or services does not constitute a license to use such products or services or a warranty or endorsement thereof. Use of such information may require a license from a third party under the patents or other intellectual property of the third party, or a license from TI under the patents or other intellectual property of TI.

Reproduction of significant portions of TI information in TI data books or data sheets is permissible only if reproduction is without alteration and is accompanied by all associated warranties, conditions, limitations, and notices. TI is not responsible or liable for such altered documentation. Information of third parties may be subject to additional restrictions.

Resale of TI components or services with statements different from or beyond the parameters stated by TI for that component or service voids all express and any implied warranties for the associated TI component or service and is an unfair and deceptive business practice. TI is not responsible or liable for any such statements.

Buyer acknowledges and agrees that it is solely responsible for compliance with all legal, regulatory and safety-related requirements concerning its products, and any use of TI components in its applications, notwithstanding any applications-related information or support that may be provided by TI. Buyer represents and agrees that it has all the necessary expertise to create and implement safeguards which anticipate dangerous consequences of failures, monitor failures and their consequences, lessen the likelihood of failures that might cause harm and take appropriate remedial actions. Buyer will fully indemnify TI and its representatives against any damages arising out of the use of any TI components in safety-critical applications.

In some cases, TI components may be promoted specifically to facilitate safety-related applications. With such components, TI’s goal is to help enable customers to design and create their own end-product solutions that meet applicable functional safety standards and requirements. Nonetheless, such components are subject to these terms.

No TI components are authorized for use in FDA Class III (or similar life-critical medical equipment) unless authorized officers of the parties have executed a special agreement specifically governing such use.

Only those TI components which TI has specifically designated as military grade or “enhanced plastic” are designed and intended for use in military/aerospace applications or environments. Buyer acknowledges and agrees that any military or aerospace use of TI components which have ***not*** been so designated is solely at the Buyer's risk, and that Buyer is solely responsible for compliance with all legal and regulatory requirements in connection with such use.

TI has specifically designated certain components as meeting ISO/TS16949 requirements, mainly for automotive use. In any case of use of non-designated products, TI will not be responsible for any failure to meet ISO/TS16949.

Products		**Applications**	
Audio	www.ti.com/audio	Automotive and Transportation	www.ti.com/automotive
Amplifiers	amplifier.ti.com	Communications and Telecom	www.ti.com/communications
Data Converters	dataconverter.ti.com	Computers and Peripherals	www.ti.com/computers
DLP® Products	www.dlp.com	Consumer Electronics	www.ti.com/consumer-apps
DSP	dsp.ti.com	Energy and Lighting	www.ti.com/energy
Clocks and Timers	www.ti.com/clocks	Industrial	www.ti.com/industrial
Interface	interface.ti.com	Medical	www.ti.com/medical
Logic	logic.ti.com	Security	www.ti.com/security
Power Mgmt	power.ti.com	Space, Avionics and Defense	www.ti.com/space-avionics-defense
Microcontrollers	microcontroller.ti.com	Video and Imaging	www.ti.com/video
RFID	www.ti-rfid.com		
OMAP Applications Processors	www.ti.com/omap	**TI E2E Community**	e2e.ti.com
Wireless Connectivity	www.ti.com/wirelessconnectivity		

Mailing Address: Texas Instruments, Post Office Box 655303, Dallas, Texas 75265
Copyright © 2013, Texas Instruments Incorporated