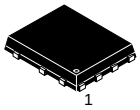

SCALE 2:1

DFN8 5x6, 1.27P Dual Flag (SO8FL−Dual−Asymmetrical)

CASE 506BX
ISSUE D

DATE 24 JUN 2014

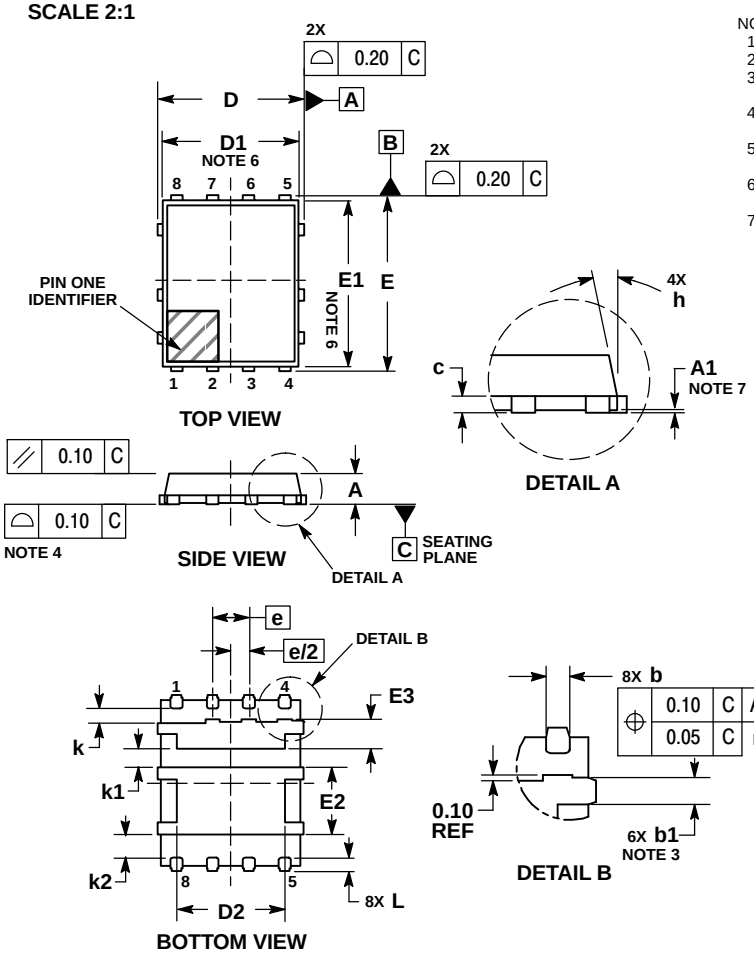

NOTES:
1. DIMENSIONING AND TOLERANCING PER ASME Y14.5M, 1994.
2. CONTROLLING DIMENSION: MILLIMETERS.
3. DIMENSION b APPLIES TO PLATED TERMINAL AND IS MEASURED BETWEEN 0.15 AND 0.25 MM FROM THE TERMINAL TIP.
4. COPLANARITY APPLIES TO THE EXPOSED PADS AS WELL AS THE TERMINALS.
5. DIMENSIONS b AND L ARE MEASURED AT THE PACKAGE SURFACE
6. DIMENSIONS D1 AND E1 DO NOT INCLUDE MOLD FLASH, PROTRUSIONS, OR GATE BURRS.
7. SEATING PLANE IS DEFINED BY THE TERMINALS. A1 IS DEFINED AS THE DISTANCE FROM THE SEATING PLANE TO THE LOWEST POINT ON THE PACKAGE BODY.

	MILLIMETERS	
DIM	MIN	MAX
A	0.90	1.10
A1	0.00	0.05
b	0.41	0.61
b1	0.41	0.61
c	0.23	0.33
D	5.00	5.30
D1	4.50	5.10
D2	3.50	4.22
E	6.00	6.30
E1	5.50	6.10
E2	2.27	2.67
E3	0.82	1.22
e	1.27 BSC	
h	−−−	12 °
k	0.39	0.59
k1	0.56	0.76
k2	0.73	0.93
L	0.35	0.55

GENERIC MARKING DIAGRAM*

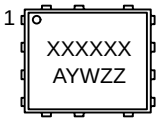

XXXXXX= Specific Device Code
A = Assembly Location
Y = Year
W = Work Week
ZZ = Lot Traceability

*This information is generic. Please refer to device data sheet for actual part marking.

RECOMMENDED SOLDERING FOOTPRINT*

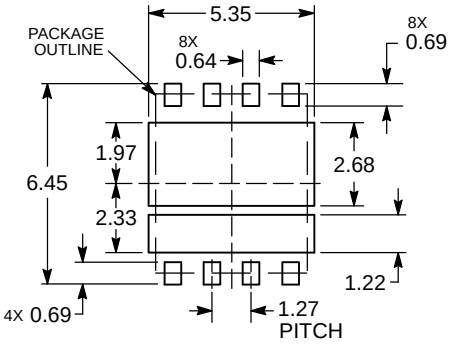

DIMENSION: MILLIMETERS

*For additional information on our Pb−Free strategy and soldering details, please download the ON Semiconductor Soldering and Mounting Techniques Reference Manual, SOLDERRM/D.

STYLE 1:
PIN 1. GATE 1
2. DRAIN 1
3. DRAIN 1
4. DRAIN 1
5. SOURCE 2
6. SOURCE 2
7. SOURCE 2
8. GATE 2
9. DRAIN 1
10. SOURCE 1/DRAIN 2

ISSUE	REVISION	DATE
O	RELEASED FOR PRODUCTION. REQ. BY M. RAMOS.	09 NOV 2010
A	CHANGED LEAD DIMENSION VALUES AND SOLDER FOOTPRINT. DIMENSION B TO 0.41 & 0.61 AND DIMENSION L TO 0.35 & 0.55. REQ. BY PH YONG.	24 JAN 2011
B	ADDED STYLE 1. REQ. BY I. CAMBALIZA.	16 FEB 2011
C	CORRECTED MARKING DIAGRAM TO ADD LOT TRACEABILITY. REQ. BY J. CARTER.	12 APR 2012
D	ADDED MIN AND MAX VALUES TO DIMENSIONS D AND E. REMOVED G DIMENSIONS AND ADDED K DIMENSIONS. REQ. BY D. TRUHITTE.	24 JUN 2014

ON Semiconductor and are registered trademarks of Semiconductor Components Industries, LLC (SCILLC). SCILLC reserves the right to make changes without further notice to any products herein. SCILLC makes no warranty, representation or guarantee regarding the suitability of its products for any particular purpose, nor does SCILLC assume any liability arising out of the application or use of any product or circuit, and specifically disclaims any and all liability, including without limitation special, consequential or incidental damages. "Typical" parameters which may be provided in SCILLC data sheets and/or specifications can and do vary in different applications and actual performance may vary over time. All operating parameters, including "Typicals" must be validated for each customer application by customer's technical experts. SCILLC does not convey any license under its patent rights nor the rights of others. SCILLC products are not designed, intended, or authorized for use as components in systems intended for surgical implant into the body, or other applications intended to support or sustain life, or for any other application in which the failure of the SCILLC product could create a situation where personal injury or death may occur. Should Buyer purchase or use SCILLC products for any such unintended or unauthorized application, Buyer shall indemnify and hold SCILLC and its officers, employees, subsidiaries, affiliates, and distributors harmless against all claims, costs, damages, and expenses, and reasonable attorney fees arising out of, directly or indirectly, any claim of personal injury or death associated with such unintended or unauthorized use, even if such claim alleges that SCILLC was negligent regarding the design or manufacture of the part. SCILLC is an Equal Opportunity/Affirmative Action Employer. This literature is subject to all applicable copyright laws and is not for resale in any manner.