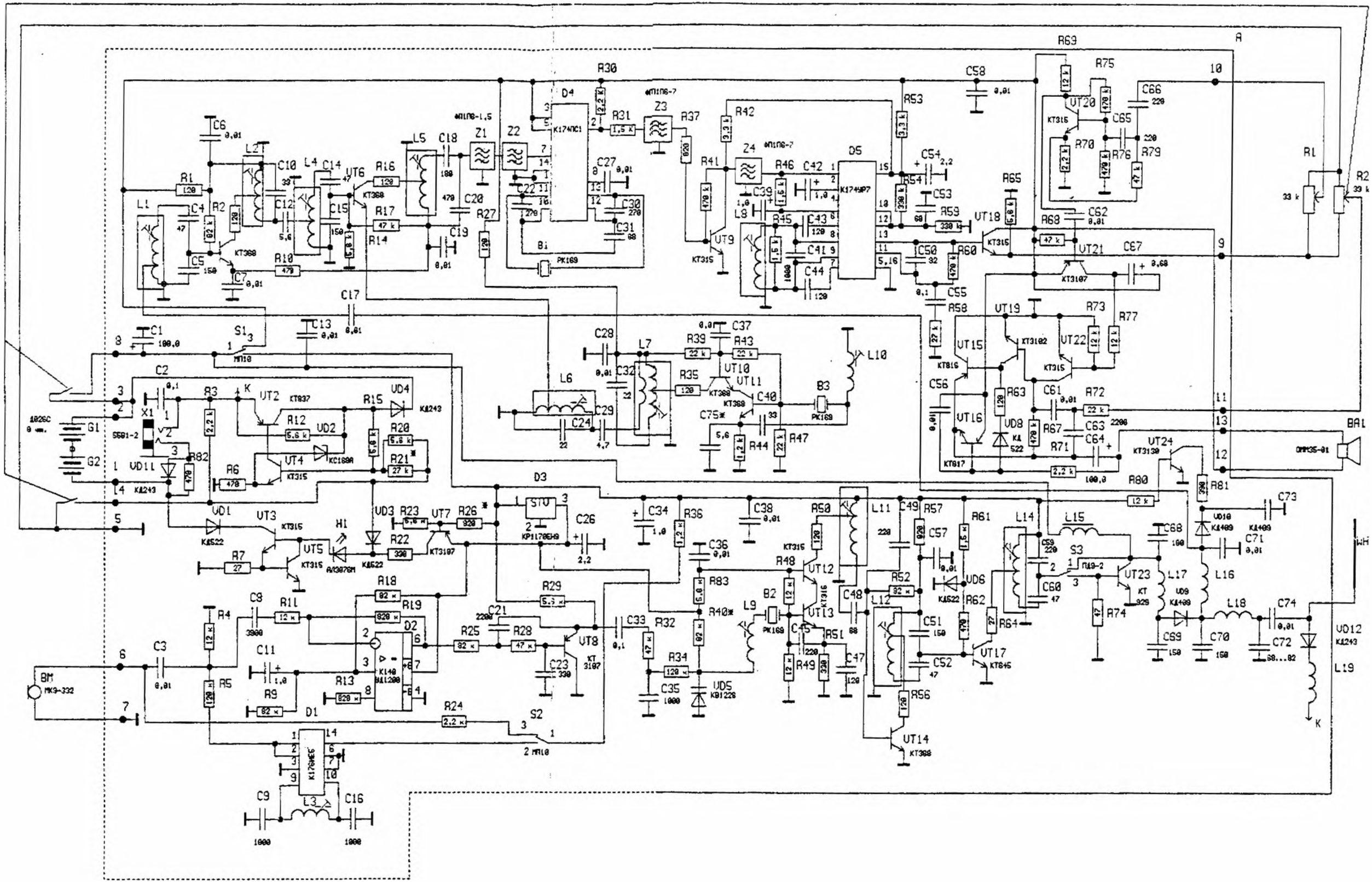
R30
D4
К174ПС1
R31
Z3
R37
R42
Z4
R41
R46
C42
D5
К174УР7
R53
C58
R69
R75
VT20
C66
C65
R70
R76
R79
R1
R2
C6
L2
C10
L4
C14
VT6
R16
L5
C18
Z1
Z2
C27
C30
C31
R17
R14
C19
C20
R27
R10
C7
C5
C4
L1
C12
C15
C22
B1
PK169
R45
C43
C41
C44
L8
VT9
KT315
C39
R54
C54
C53
R59
R65
VT18
R68
C62
C67
VT21
KT3107
C50
R60
C55
R58
VT19
R73
R77
VT15
VT22
VT16
C56
R63
C61
R72
VD8
R67
C63
C64
R71
VT24
KT3139
R80
R81
C73
C71
C17
C13
C1
S1
C2
X1
R3
VT2
KT837
R12
VD2
R15
VD4
KД243
R20
R21
R82
VD11
R6
VT4
KT315
G1
G2
1026C
5591-2
C28
L7
L6
C32
C29
C24
R39
C37
R43
R35
VT10
VT11
C40
C75
R44
R47
B3
L10
D3
STU
C26
C34
R36
C38
R50
L11
C49
R57
R61
L14
L15
C68
C69
C70
C72
L16
L17
L18
L19
C74
VD12
VD1
VT3
KT315
VT5
R7
H1
VD3
R23
VT7
R26
R22
KT3107
C8
R11
R18
R19
R4
R5
C3
C11
R13
R9
D2
К140УД1208
D1
R25
C21
R28
VT8
C23
R29
C33
R32
R34
C35
VD5
R40
R83
B2
L9
R48
VT12
VT13
R49
R51
C45
C47
C48
R52
L12
C51
C52
R56
VT14
VT17
R62
R64
VD6
C59
C60
S3
VT23
R74
C9
C16
L3
R24
S2
BM
МК9-332
WH
BAL
DYN35-01

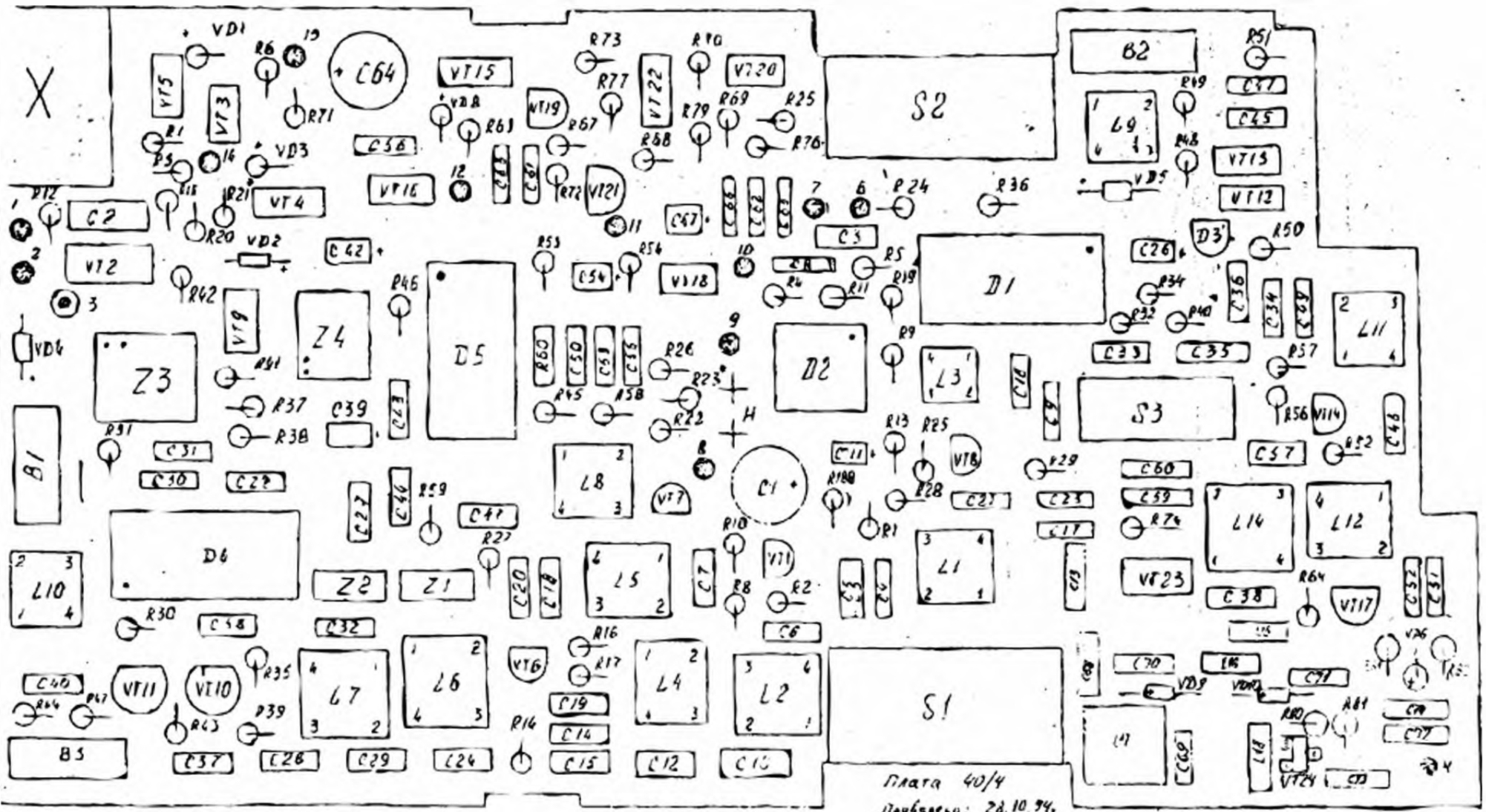
X
VD1
R6
C64
VT15
R73
R70
VT20
S2
B2
R51
VT5
VT3
R71
VT19
R77
VT22
R79
R69
R25
R76
R68
R67
R63
C36
VD3
R1
R5
R18
R21
VT4
VT16
VT21
R72
C67
C3
R24
R36
VD5
L9
R49
C37
C45
R48
VT13
VT12
R12
C2
R20
VD2
C42
R53
R54
C54
VT18
R4
R11
R19
D1
D3
R50
C26
R34
R32
R40
C36
C34
C28
L11
VT2
R42
VT9
Z4
R46
D5
R60
C50
C53
C35
R26
R23
D2
R9
L3
C33
C35
R57
VD4
Z3
R41
R37
R38
C39
C23
R45
R58
R22
C18
C19
S3
R56
VT14
C48
B1
R31
C31
C30
C29
C22
C46
R59
L8
C11
R13
R25
VT8
R29
C57
R52
C60
C59
R74
C17
C13
VT23
C38
R64
VT17
C52
C51
L14
L12
D6
C47
R27
VT7
C1
R10
R28
R1
L1
L10
R30
C38
C32
Z2
Z1
C20
C18
L5
C7
VT11
R8
R2
C5
C6
C16
C8
C70
C71
C72
C73
C74
C77
VD9
VD10
R80
R81
VT24
C75
B5
C40
R44
R47
VT11
VT10
R35
L7
L6
VT6
R16
R17
L4
L2
S1
C19
C14
C15
C12
C10
R43
R39
R14
C37
C26
C29
C24
Плата 40/4
Проверено: 28.10.94г.