APC-UNIT F3212102A

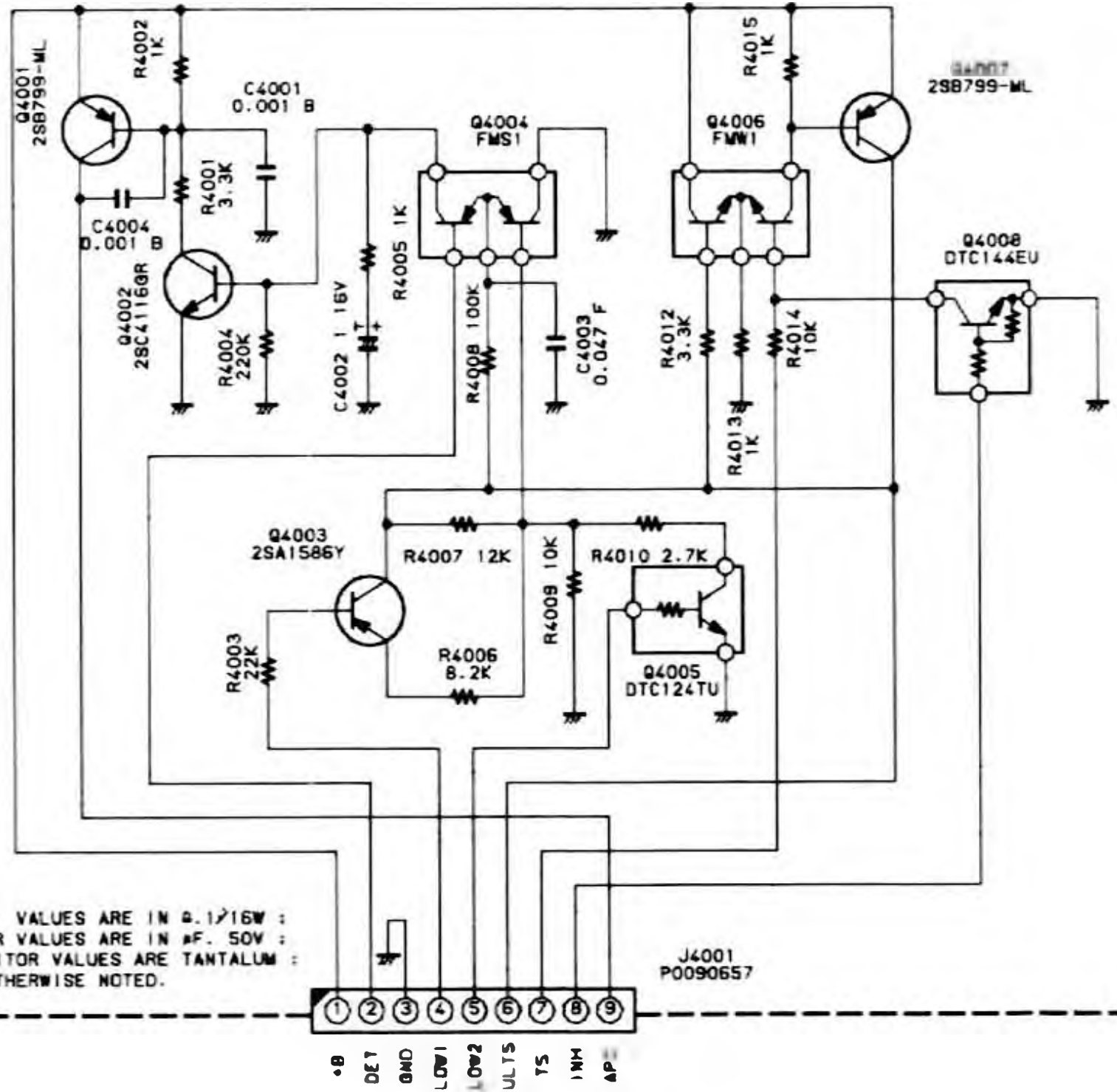

NOTE:
RESISTOR VALUES ARE IN Ω. 1/16W :
CAPACITOR VALUES ARE IN μF. 50V :
(T) CAPACITOR VALUES ARE TANTALUM :
UNLESS OTHERWISE NOTED.

CLOCK-UNIT
F3222101A

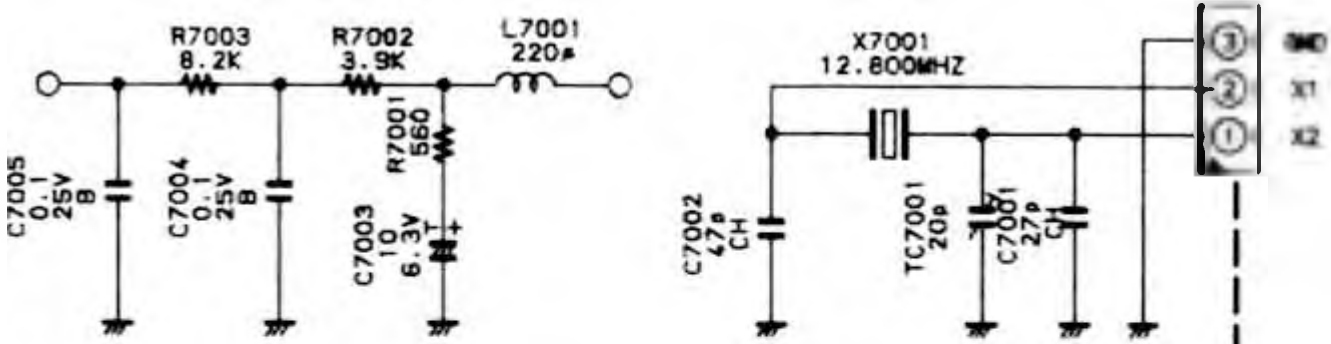

NOTE:
RESISTOR VALUES ARE IN Ω.1/16W ;
CAPACITOR VALUES ARE IN μF. 50V ;
(T) CAPACITOR VALUES ARE TANTALUM ;
INDUCTOR VALUES ARE IN H
UNLESS OTHERWISE NOTED.

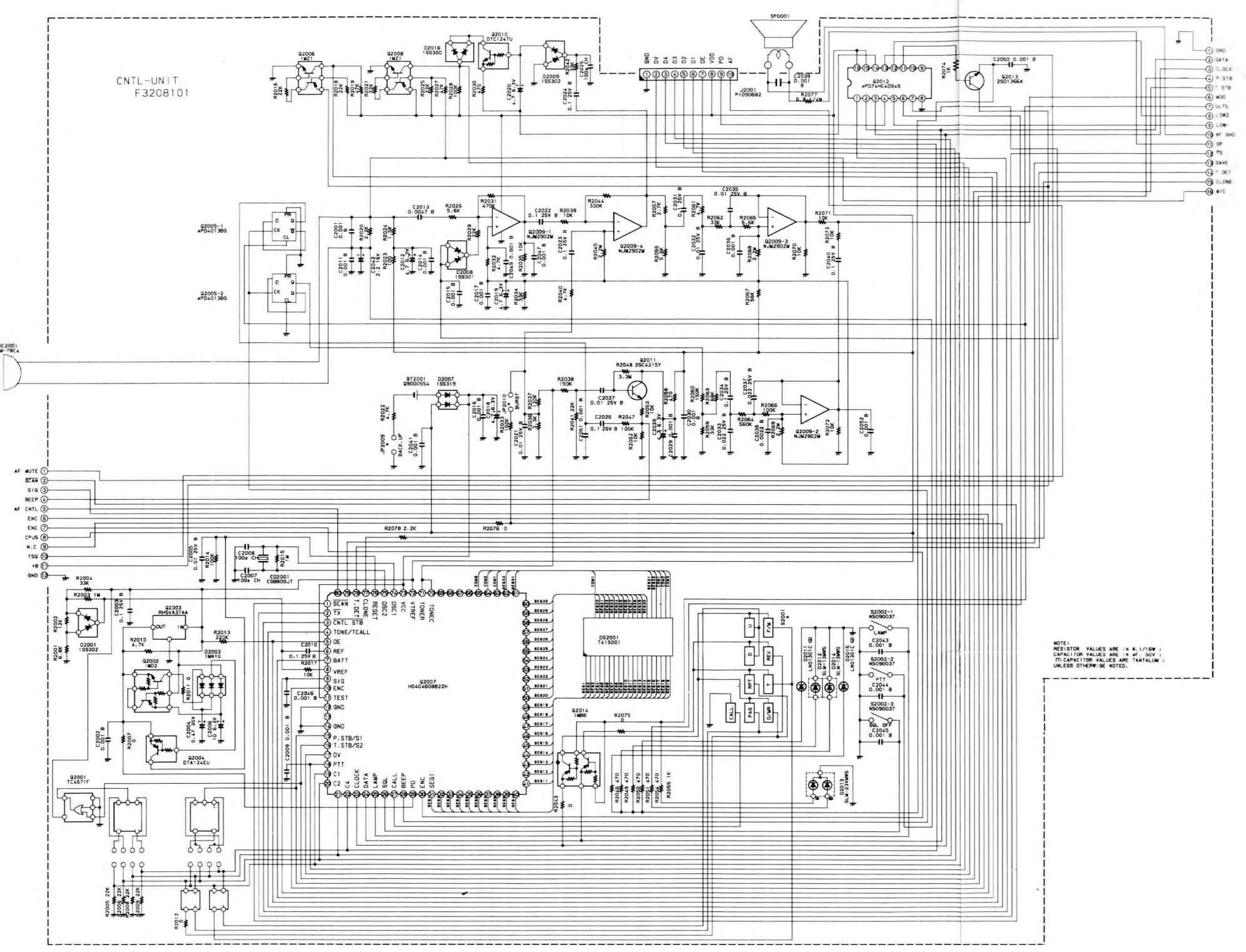
CNTL-UNIT
F3208101
NOTE:
RESISTOR VALUES ARE IN Ω, 1/16W ;
CAPACITOR VALUES ARE IN μF, 50V ;
(T) CAPACITOR VALUES ARE TANTALUM ;
UNLESS OTHERWISE NOTED.

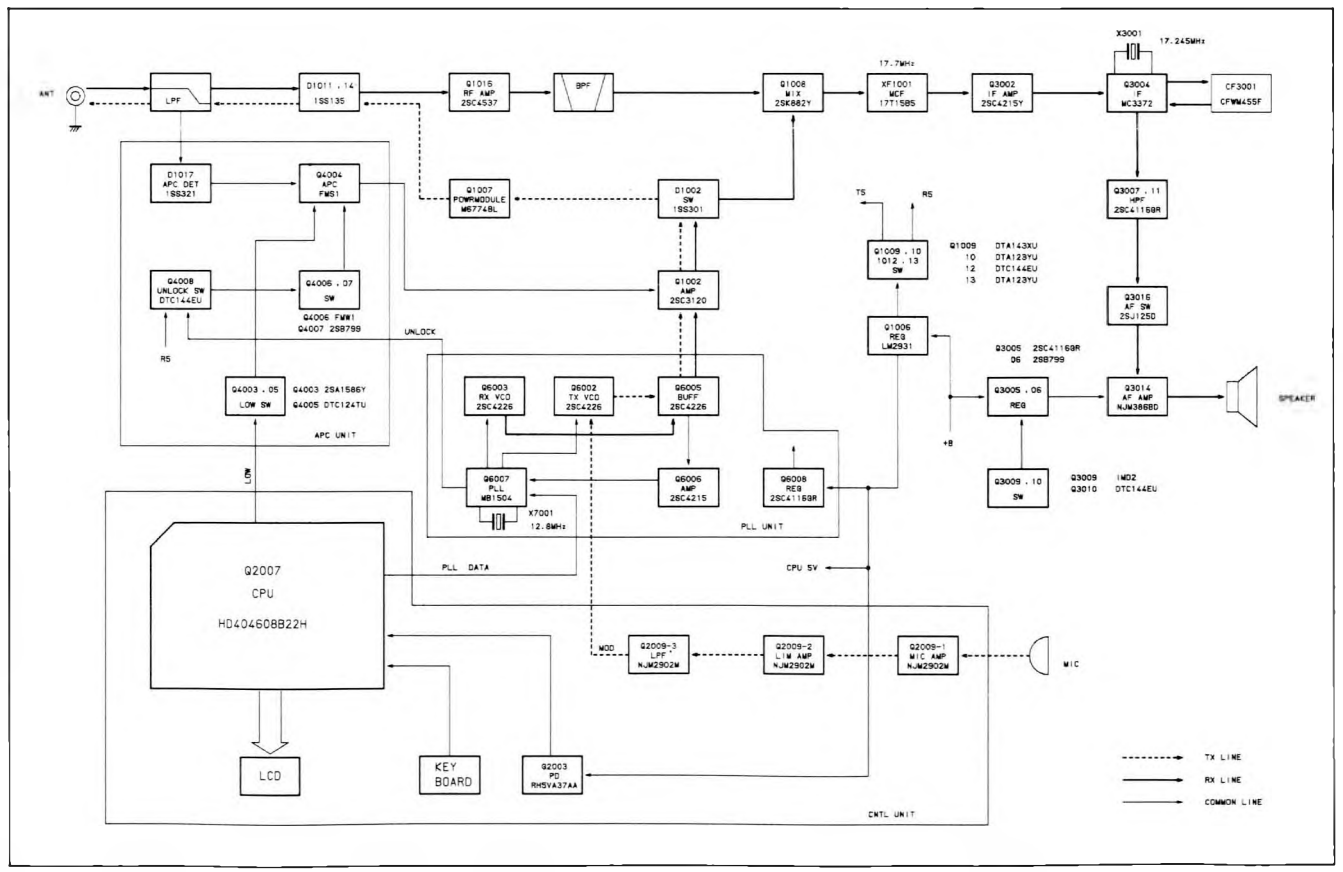
ANT
LPF
D1011 . 14
1SS135
Q1016
RF AMP
2SC4537
BPF
Q1008
MIX
2SK882Y
17.7MHz
XF1001
MCF
17T1585
Q3002
IF AMP
2SC4215Y
X3001
17.245MHz
Q3004
F
MC3372
CF3001
CFWM455F
D1017
APC DET
1SS321
Q4004
APC
FW51
Q1007
POWRMODULE
M67748L
D1002
SW
1SS301
TS
RS
Q3007 . 11
HPF
2SC4116GR
Q1009 . 10
1012 . 13
SW
Q1009
10
12
13
DTA143XU
DTA123YU
DTC144EU
DTA123YU
Q4008
UNLOCK SW
DTC144EU
Q4006 . 07
SW
Q4006 FWM1
Q4007 2SB799
Q1002
AMP
2SC3120
Q3016
SW
2SJ125D
UNLOCK
Q1006
REG
LM2931
Q3005 2SC4116GR
06 2SB799
RS
Q4003 . 05
LOW SW
Q4003 2SA1586Y
Q4005 DTC124TU
APC UNIT
Q6003
RX VCO
2SC4226
Q6002
TX VCO
2SC4226
Q6005
BUFF
2SC4226
Q3005 . 06
REG
Q3014
AF AMP
NJM3886D
SPEAKER
+B
LOW
Q6007
PLL
MB1504
X7001
12.8MHz
Q6006
AMP
2SC4215
Q6008
REG
2SC4116GR
Q3009 . 10
SW
Q3009
Q3010
1M02
DTC144EU
PLL UNIT
Q2007
CPU
HD404608B22H
PLL DATA
CPU 5V
MOD
Q2009-3
LPF
NJM2902M
Q2009-2
LIM AMP
NJM2902M
Q2009-1
MIC AMP
NJM2902M
MIC
LCD
KEY
BOARD
Q2003
PD
RHSVA37AA
CNTL UNIT
TX LINE
RX LINE
COMMON LINE

IF UNIT F3213102A

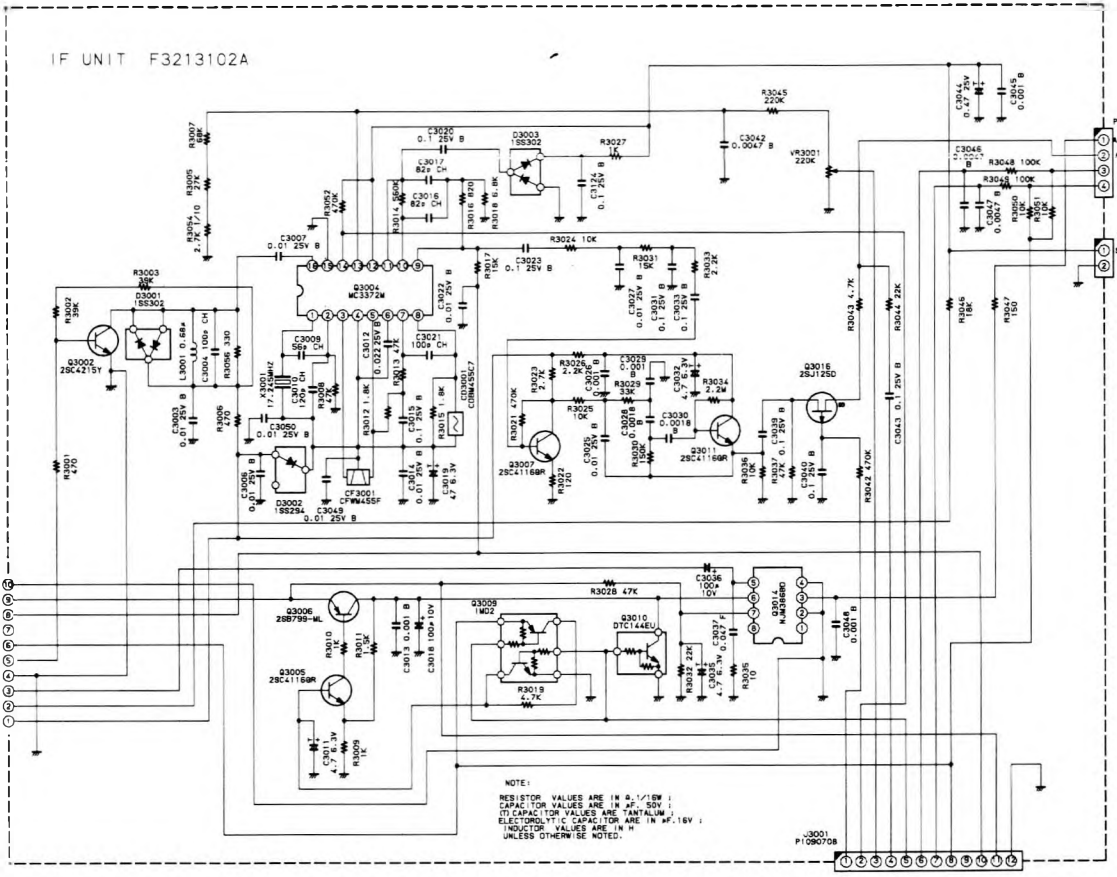

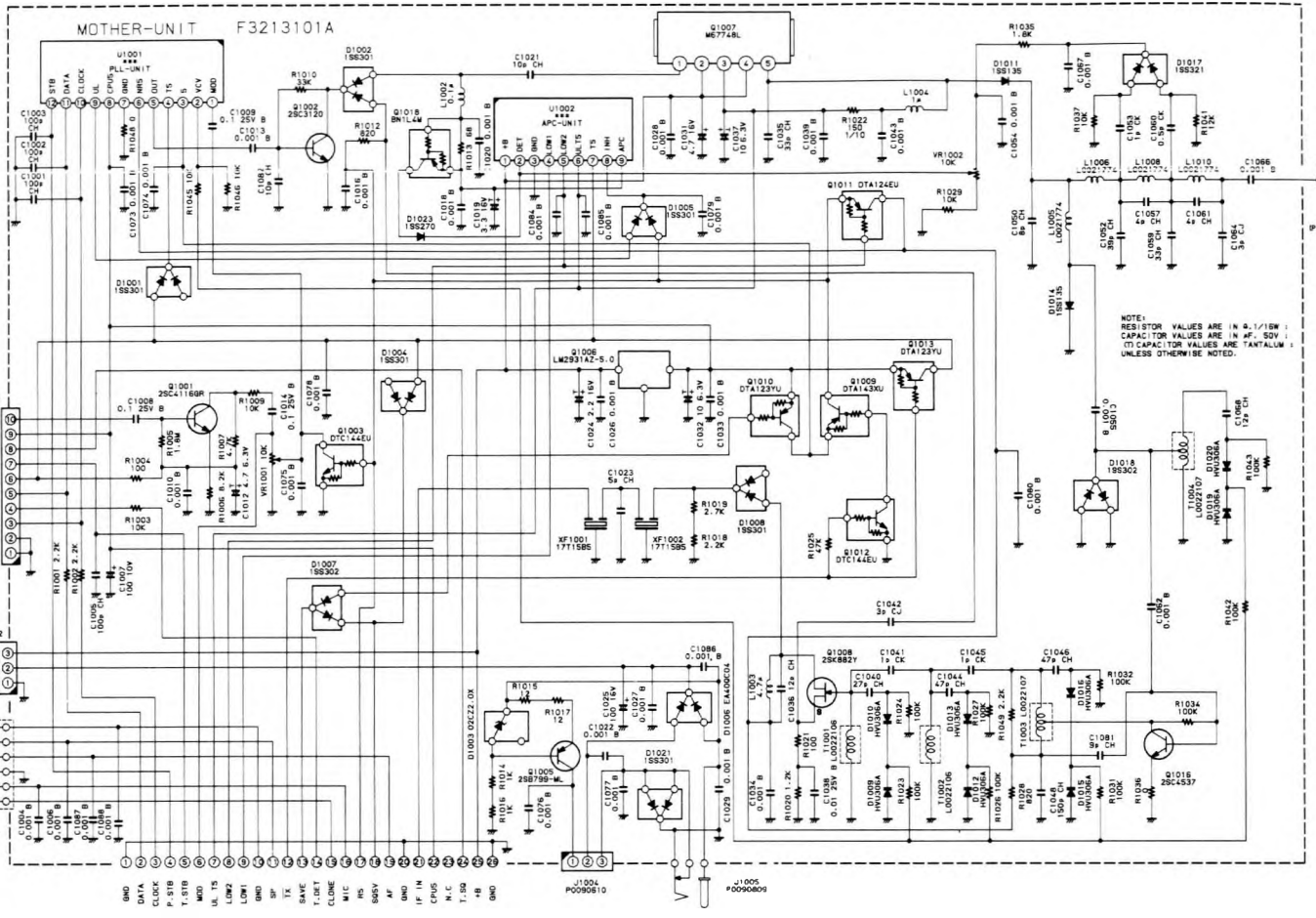
MOTHER-UNIT F3213101A
U1001 PLL-UNIT
U1002 APC-UNIT
Q1007 M67748L
ANT
(P1090623)
NOTE:
RESISTOR VALUES ARE IN Ω,1/16W ;
CAPACITOR VALUES ARE IN μF, 50V ;
(T) CAPACITOR VALUES ARE TANTALUM ;
UNLESS OTHERWISE NOTED.
J1003 P0090682
TONE
CPUS
TSQ1
T.STB
TS
DATA
T.DET
CLOCK
GND
GND
J1002 T9206052
+BOUT
+B IN
GND
SP
MIC J1001 P1090691
GND
DATA
CLOCK
P.STB
T.STB
MOD
UL TS
LOW2
LOW1
GND
SP
TX
SAVE
T.DET
CLONE
MIC
HS
SGGV
AF
GND
IF IN
CPUS
N.C
T.SQ
+B
GND
J1004 P0090810
J1005 P0090809

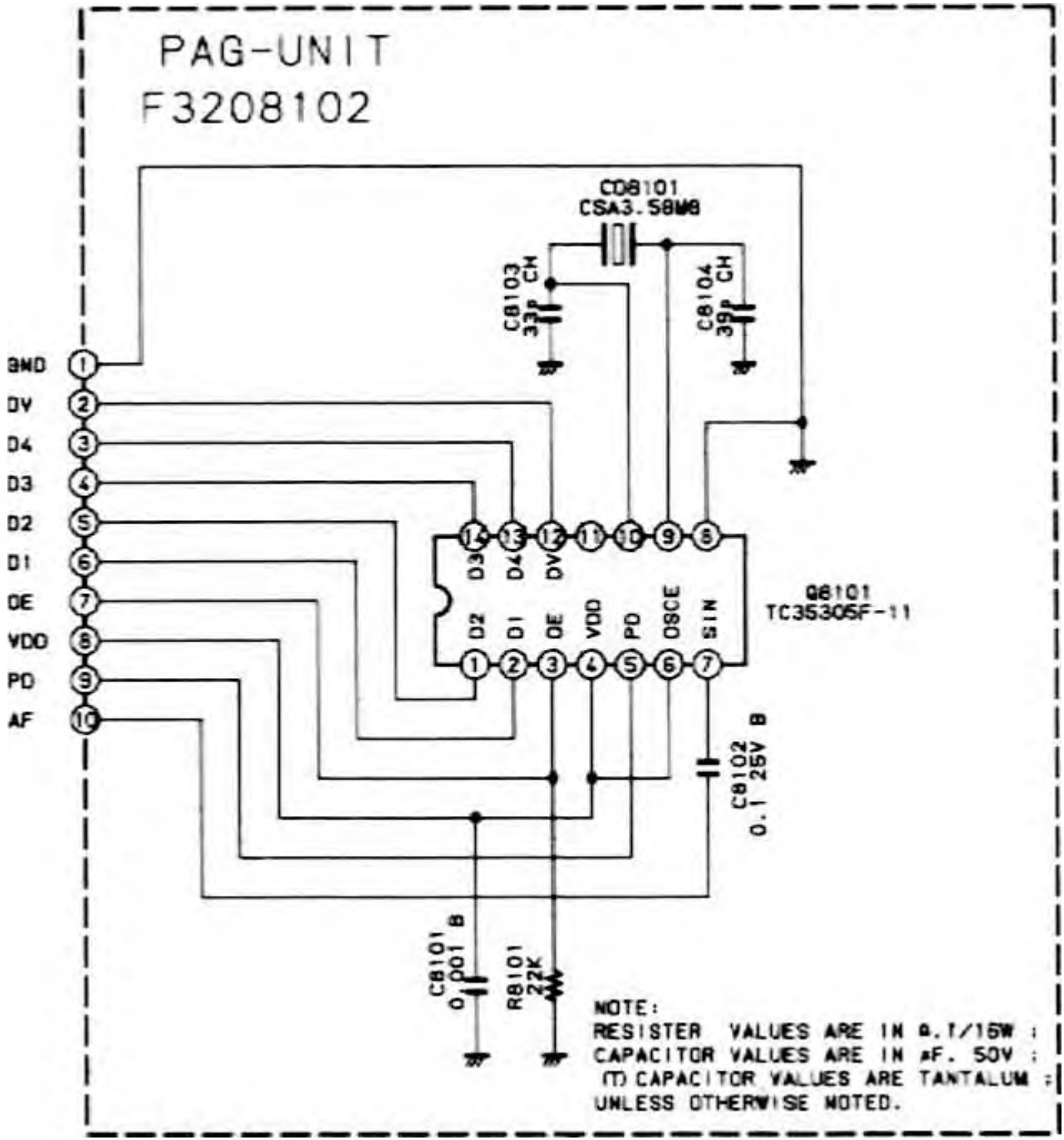
PAG-UNIT
F3208102
CD8101
CSA3.58MB
C8103
33P CH
C8104
39P CH
GND
DV
D4
D3
D2
D1
OE
VDD
PD
AF
D3
D4
DV
D2
D1
OE
VDD
PD
OSCE
SIN
Q8101
TC35305F-11
C8102
0.1 25V B
C8101
0.001 B
R8101
22K
NOTE:
RESISTER VALUES ARE IN Ω.1/16W ;
CAPACITOR VALUES ARE IN μF. 50V ;
(T) CAPACITOR VALUES ARE TANTALUM ;
UNLESS OTHERWISE NOTED.

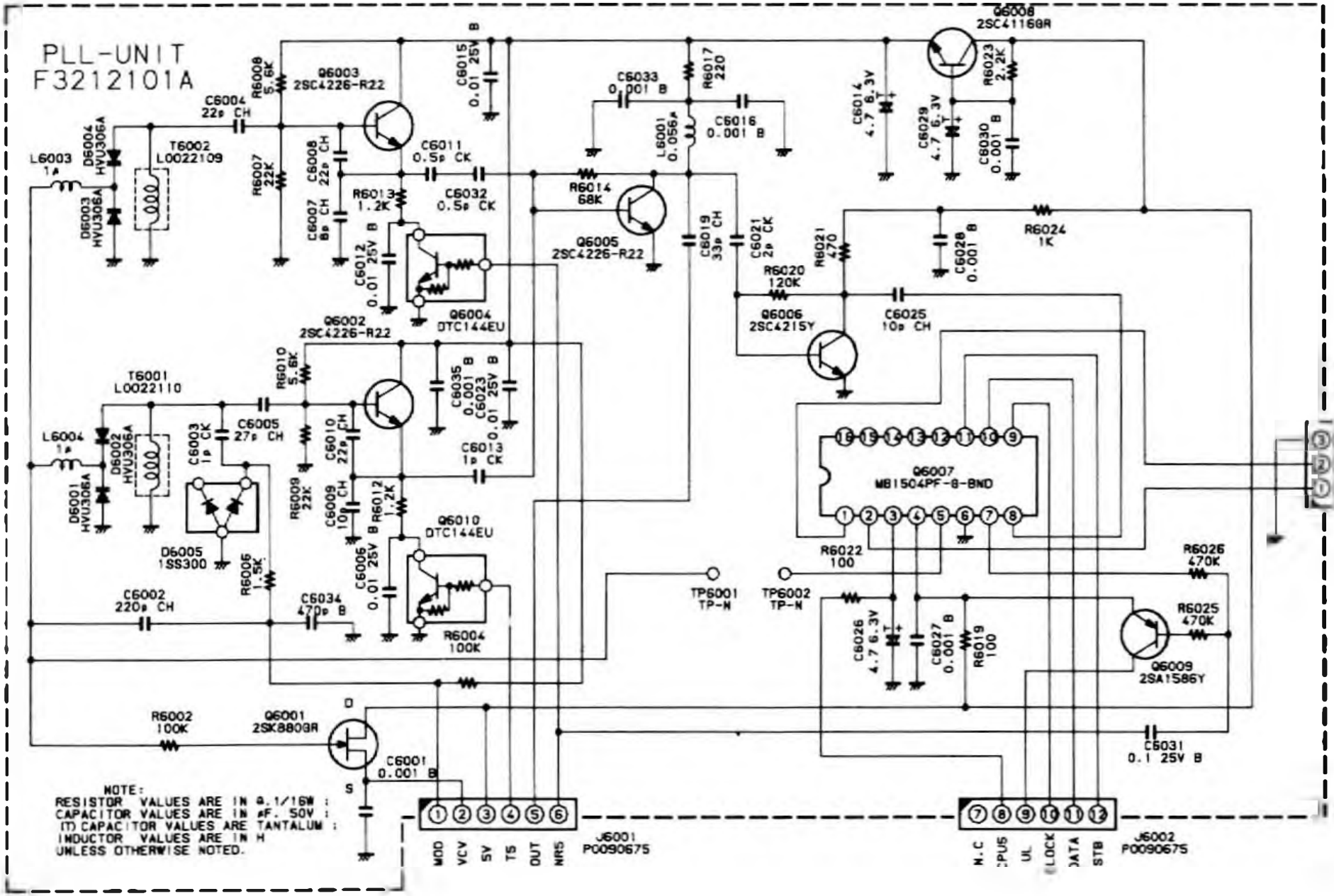
PLL-UNIT
F3212101A
Q6003
2SC4226-R22
Q6005
2SC4226-R22
Q6002
2SC4226-R22
Q6004
DTC144EU
Q6010
DTC144EU
Q6006
2SC4215Y
Q6008
2SC4116GR
Q6007
MB1504PF-G-BND
Q6009
2SA1586Y
Q6001
2SK880GR
T6002
L0022109
T6001
L0022110
D6005
1SS300
TP6001
TP-N
TP6002
TP-N
J6001
P0090675
J6002
P0090675
J6003
P0090702
MOD
VCV
5V
TS
OUT
NRS
N.C
CPU5
UL
LOCK
DATA
STB
GND
X1
X2
NOTE:
RESISTOR VALUES ARE IN Ω 1/16W ;
CAPACITOR VALUES ARE IN μF. 50V ;
(T) CAPACITOR VALUES ARE TANTALUM ;
INDUCTOR VALUES ARE IN H
UNLESS OTHERWISE NOTED.
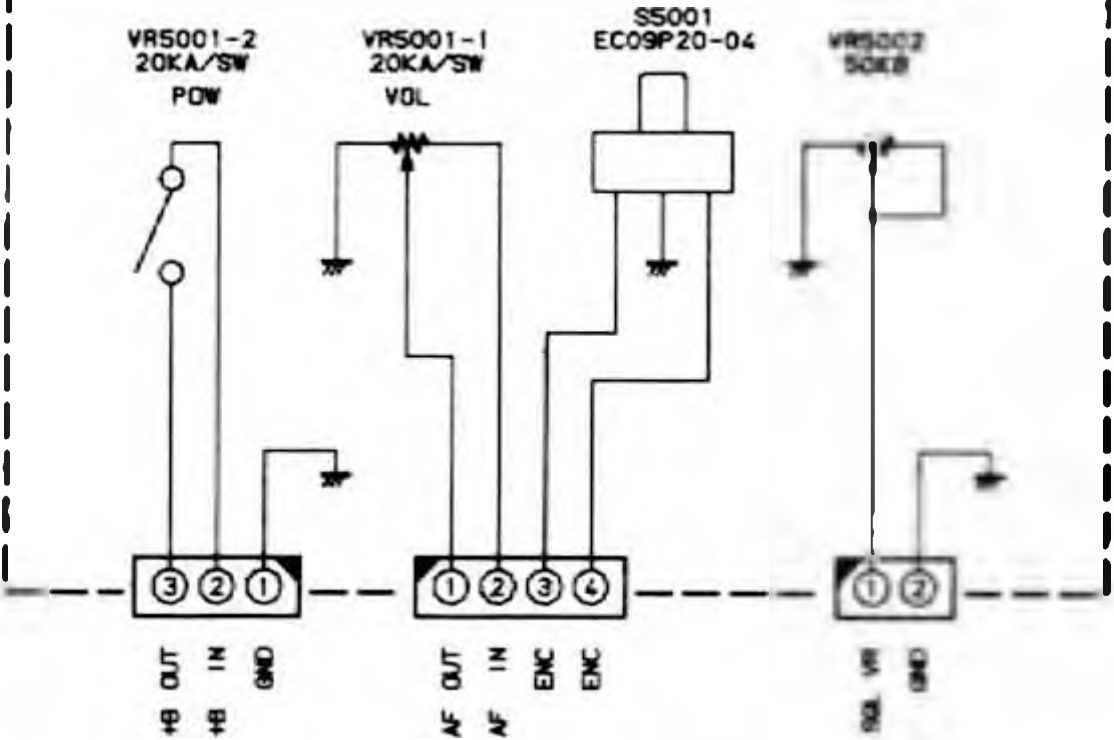
VR-UNIT F3211000