# SCHEMAT IDEOWY CURTIS 25M..., 28M...,

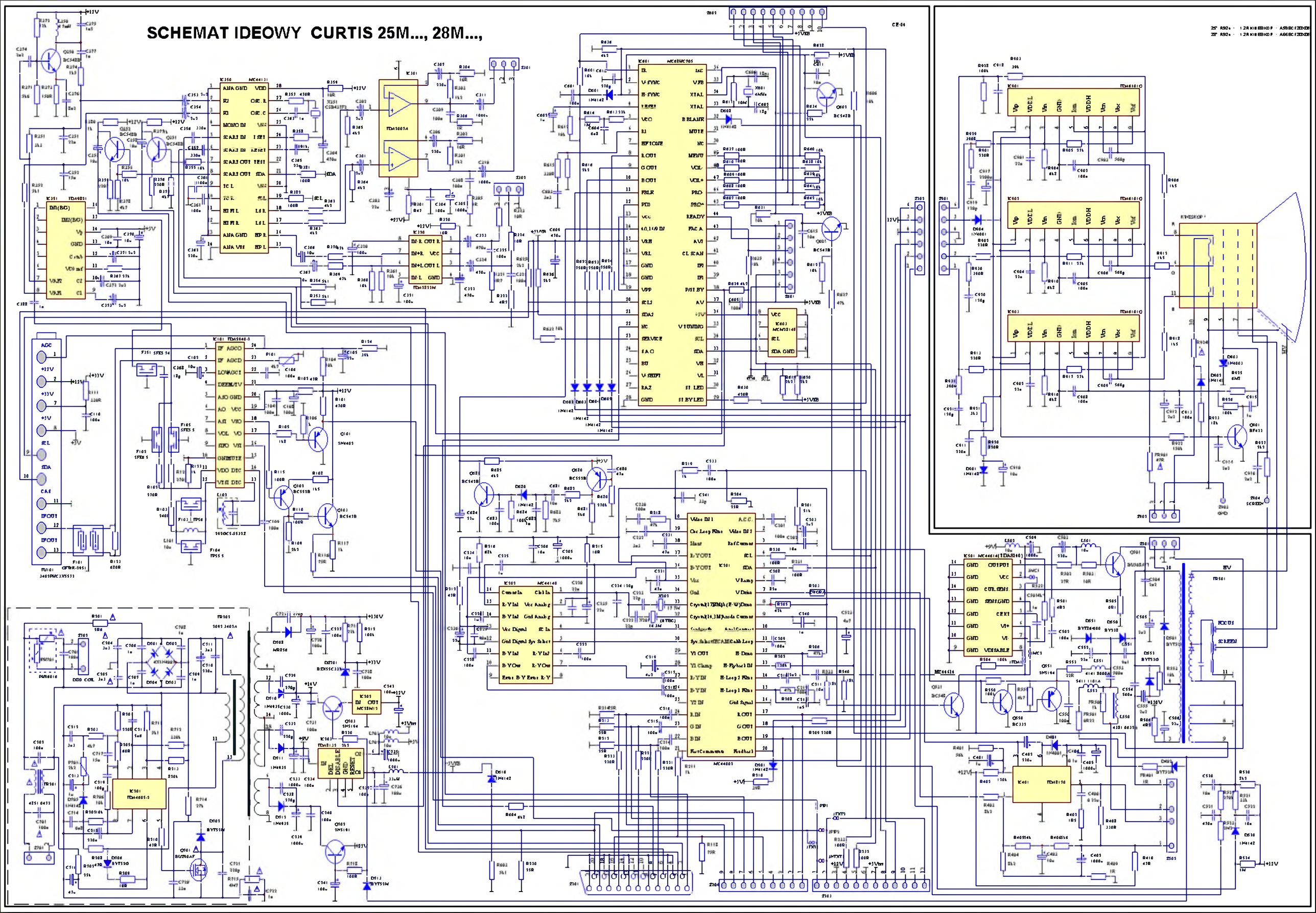

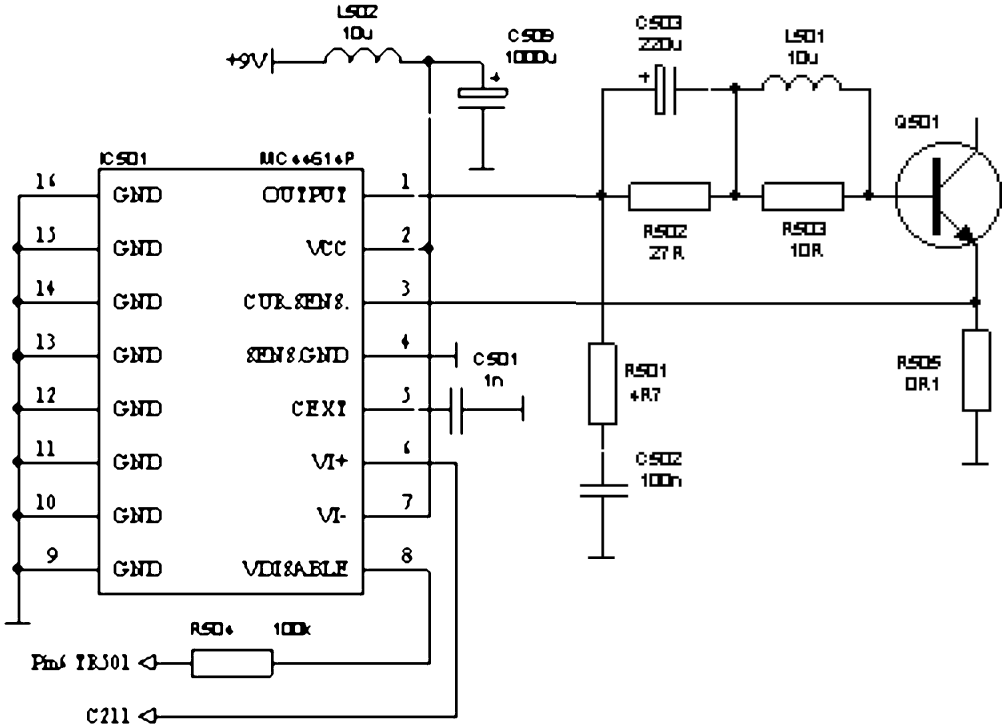
L502
10u
+9V
C509
1000u
C503
220u
L501
10u
Q501
IC501
MC44614P
16
GND
15
GND
14
GND
13
GND
12
GND
11
GND
10
GND
9
GND
OUTPUT
VCC
CUR.SENS.
SENS.GND
CEXT
VI+
VI-
VDISABLE
1
2
3
4
5
6
7
8
R502
27R
R503
10R
C501
1n
R501
4R7
C502
100n
R505
0R1
R504
100k
Pin4 IR301
C211

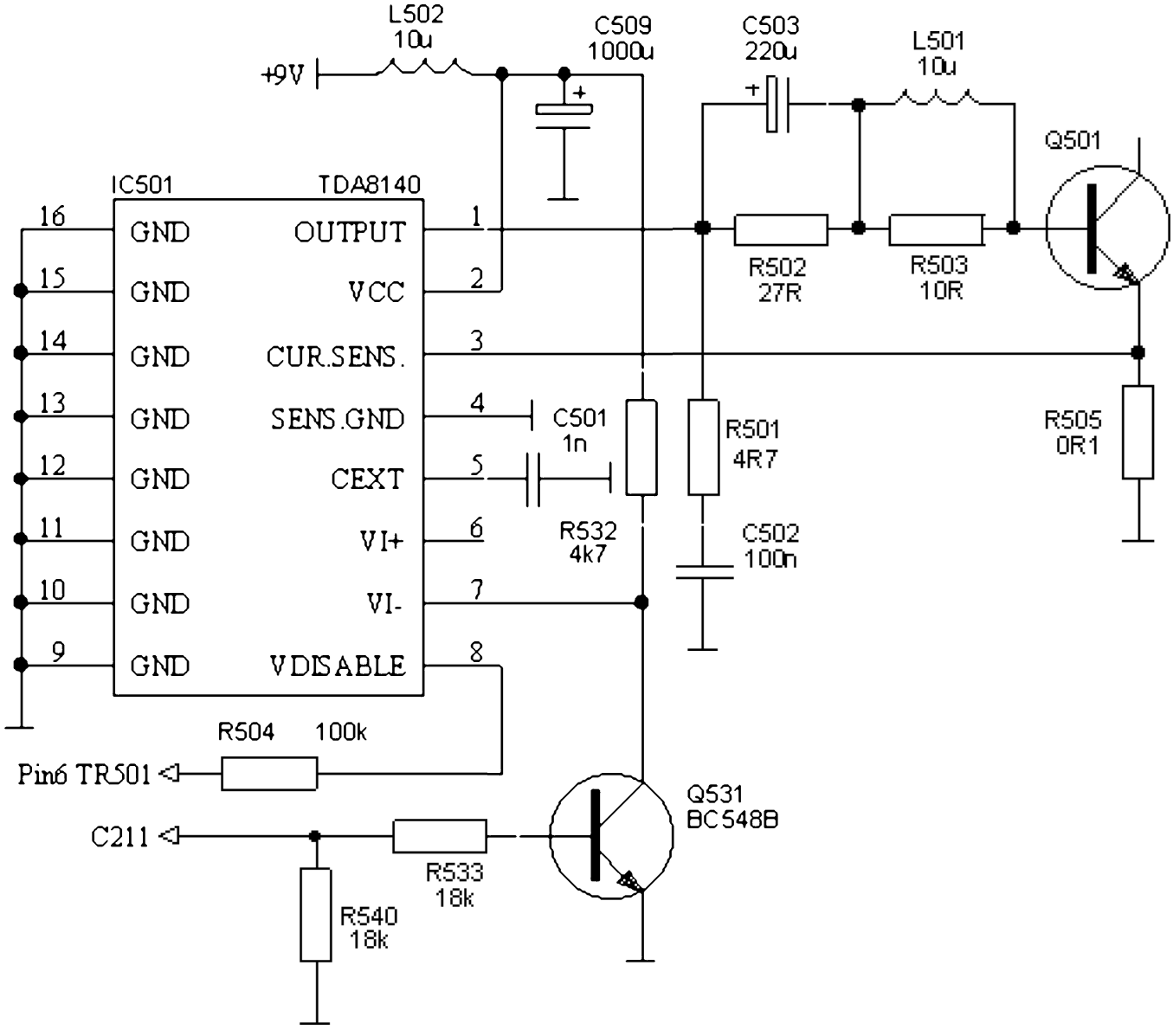
L502
10u
+9V
C509
1000u
C503
220u
L501
10u
Q501
IC501
TDA8140
16
15
14
13
12
11
10
9
GND
GND
GND
GND
GND
GND
GND
GND
OUTPUT
VCC
CUR.SENS.
SENS.GND
CEXT
VI+
VI-
VDISABLE
1
2
3
4
5
6
7
8
R502
27R
R503
10R
C501
1n
R532
4k7
R501
4R7
C502
100n
R505
0R1
R504
100k
Pin6 TR501
C211
R533
18k
R540
18k
Q531
BC548B