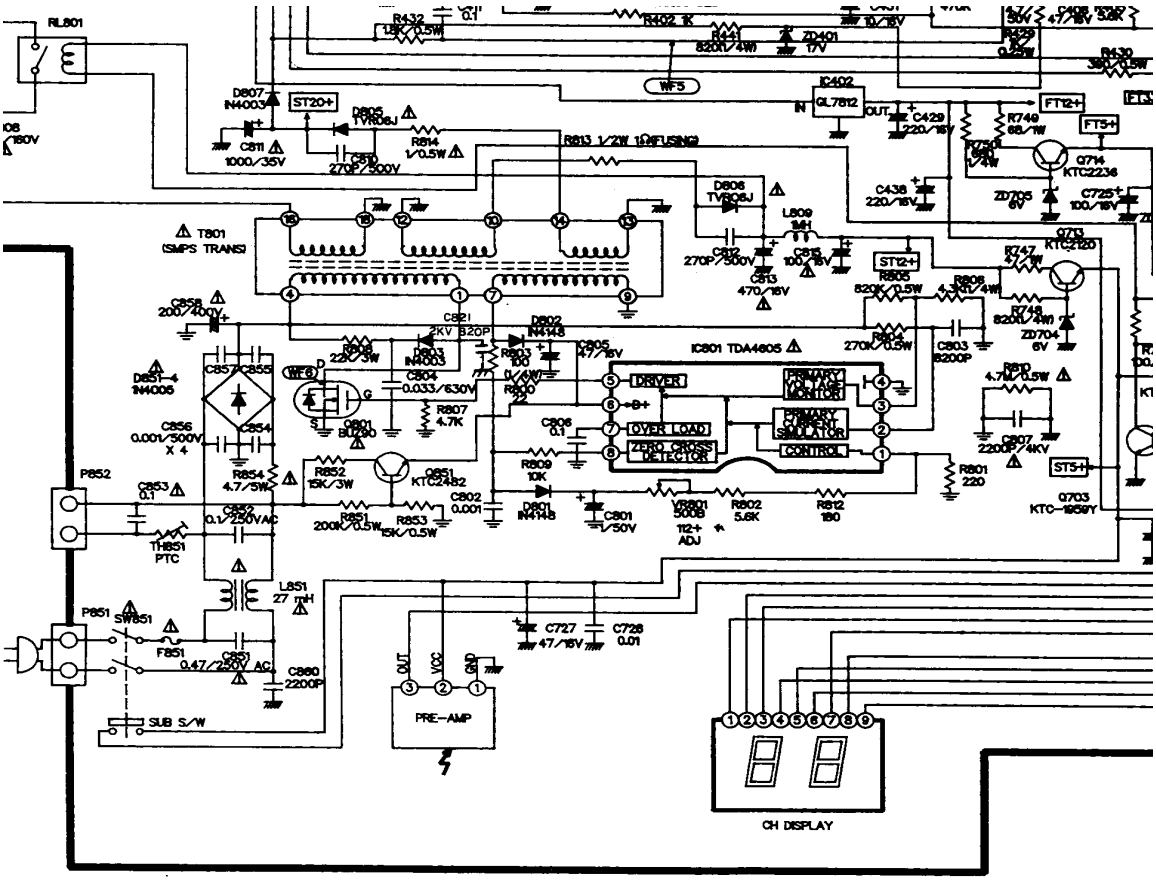
RL801
R432 1K
R402 1K
R441 820Ω/4W
ZD401 17V
R429 0.25W
R430 390/0.5W
WF5
IC402
GL7812
IN
OUT
C429 220/16V
FT12+
FT5+
R749 68/1W
R750 68/1W
Q714 KTC2236
D807 IN4003
ST20+
D805 TVR06J
R814 1/0.5W
C811 1000/35V
C810 270P/500V
R813 1/2W 1Ω(FUSING)
D806 TVR06J
L809 1μH
C438 220/16V
ZD705 6V
C725 100/16V
T801 (SMPS TRANS)
C812 270P/500V
C813 470/16V
C815 100/16V
ST12+
R805 820K/0.5W
R806 4.3K/4W
R747 47/1W
Q713 KTC2120
R748 820Ω/4W
ZD704 6V
C858 200/400V
C821 2KV 820P
D802 IN4148
R808 22/5W
D803 IN4003
R803 100
C805 47/16V
IC801 TDA4605
R804 270K/0.5W
C803 8200P
D851-4 IN4005
C857 C855
WF6
C804 0.033/630V
R800 22
DRIVER
PRIMARY VOLTAGE MONITOR
R809 4.7K/0.5W
C807 2200P/4KV
C856 0.001/500V X 4
C854
R807 4.7K
D801 BU2040
+B+
C806 0.1
OVER LOAD
PRIMARY CURRENT SIMULATOR
ZERO CROSS DETECTOR
CONTROL
R801 220
ST5+
P852
C853 0.1
R854 4.7/5W
R852 15K/3W
Q851 KTC2482
R809 10K
C802 0.001
D801 IN4148
C801 1/50V
VR801 500B 112+ ADJ
R802 5.6K
R812 180
Q703 KTC-1959Y
C852 0.1/250VAC
R851 200K/0.5W
R853 15K/0.5W
THB51 PTC
L851 27 mH
P851
SW851
F851
C851 0.47/250V AC
C860 2200P
SUB S/W
C727 47/16V
C728 0.01
OUT
VCC
GND
PRE-AMP
CH DISPLAY