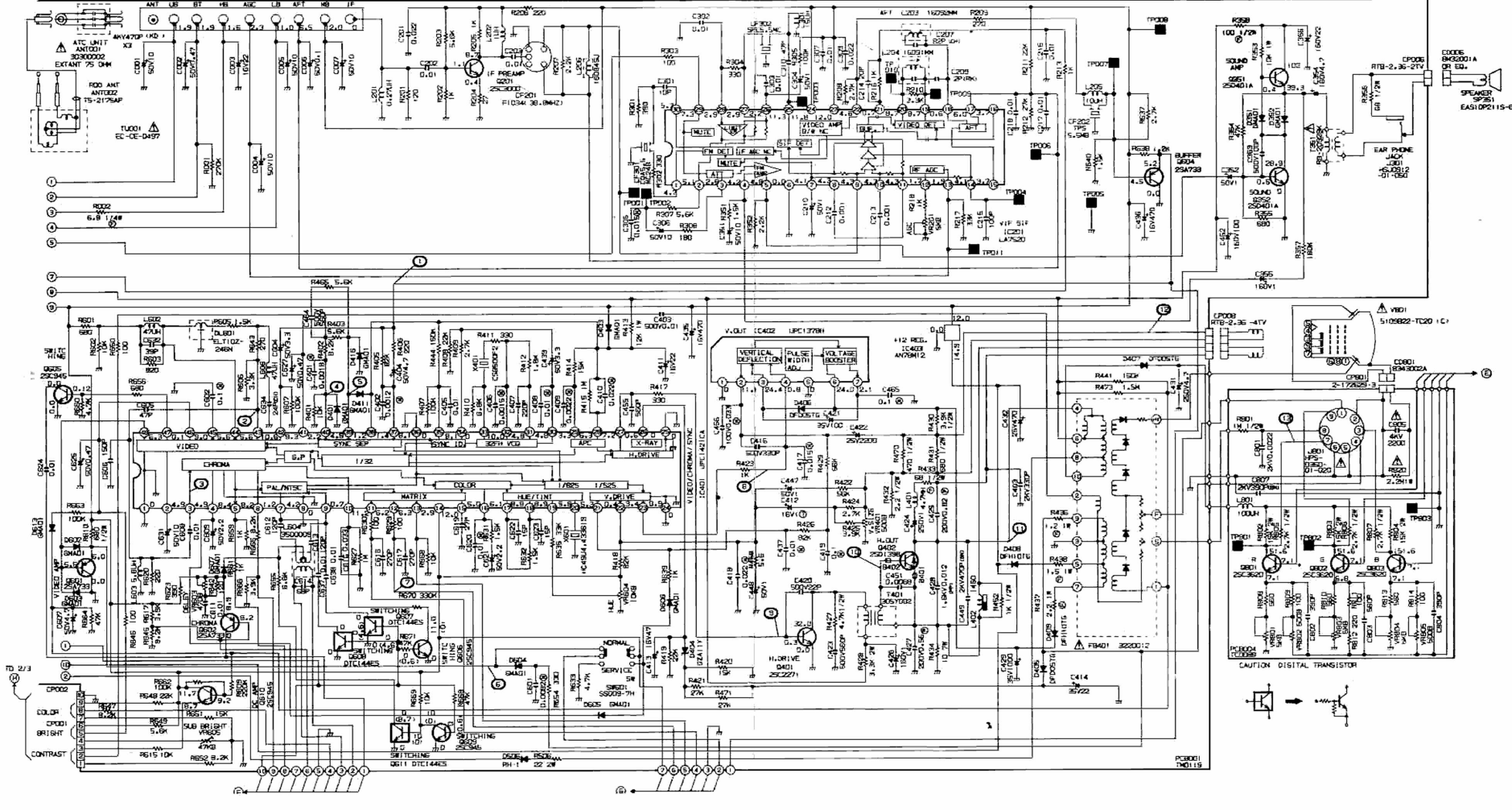
ATC UNIT
ANT001
30300002
EXTANT 75 OHM
ROD ANT
ANT002
TS-2175AP
TU001
EC-CE-D497
IF PREAMP
Q201
2SC3001
CF201
F1034 38.9MHZ
VIDEO AMP
VIDEO DET
IF AGC MC
FM DET
SIF DET
AFT
RF AGC
VIF SIF
IC201
LA7520
SOUND AMP
Q651
2SD401A
SOUND
Q652
2SD401A
BUFFER
Q604
2SA733
SPEAKER
SP651
EAS10P211S-6
EAR PHONE
JACK
J001
KJ-0012
01-152
CD006
8K32001A
CN EQ.
VIDEO
SYNC SEP
SYNC DET
32FH VCO
APC
X-RAY
H.DRIVE
CHROMA
PAL/NTSC
COLOR
MATRIX
HUE/TINT
V.DRIVE
VIDEO/CHROMA/SYNC
IC401
UPC1421CA
V.OUT IC402 UPC1378H
VERTICAL DEFLECTION
PULSE WIDTH ADJ
VOLTAGE BOOSTER
+12 REG.
AN7812
H.OUT
Q402
2SD1398
H.DRIVE
Q401
2SC2271
SWITCHING
Q611 DTC144ES
SWITCHING
Q601 DTC144ES
SWITCHING
Q606 DTC144ES
NORMAL
SERVICE
SW
SW001
SS009-7H
DC AMP
Q610
2SC945
SUB BRIGHT
VR605
COLOR
CPD01
BRIGHT
CONTRAST
CAUTION DISITAL TRANSISTOR
PCB001
TM0119
PCB004
TC0088
FB401
3220012

Orion model: 20x

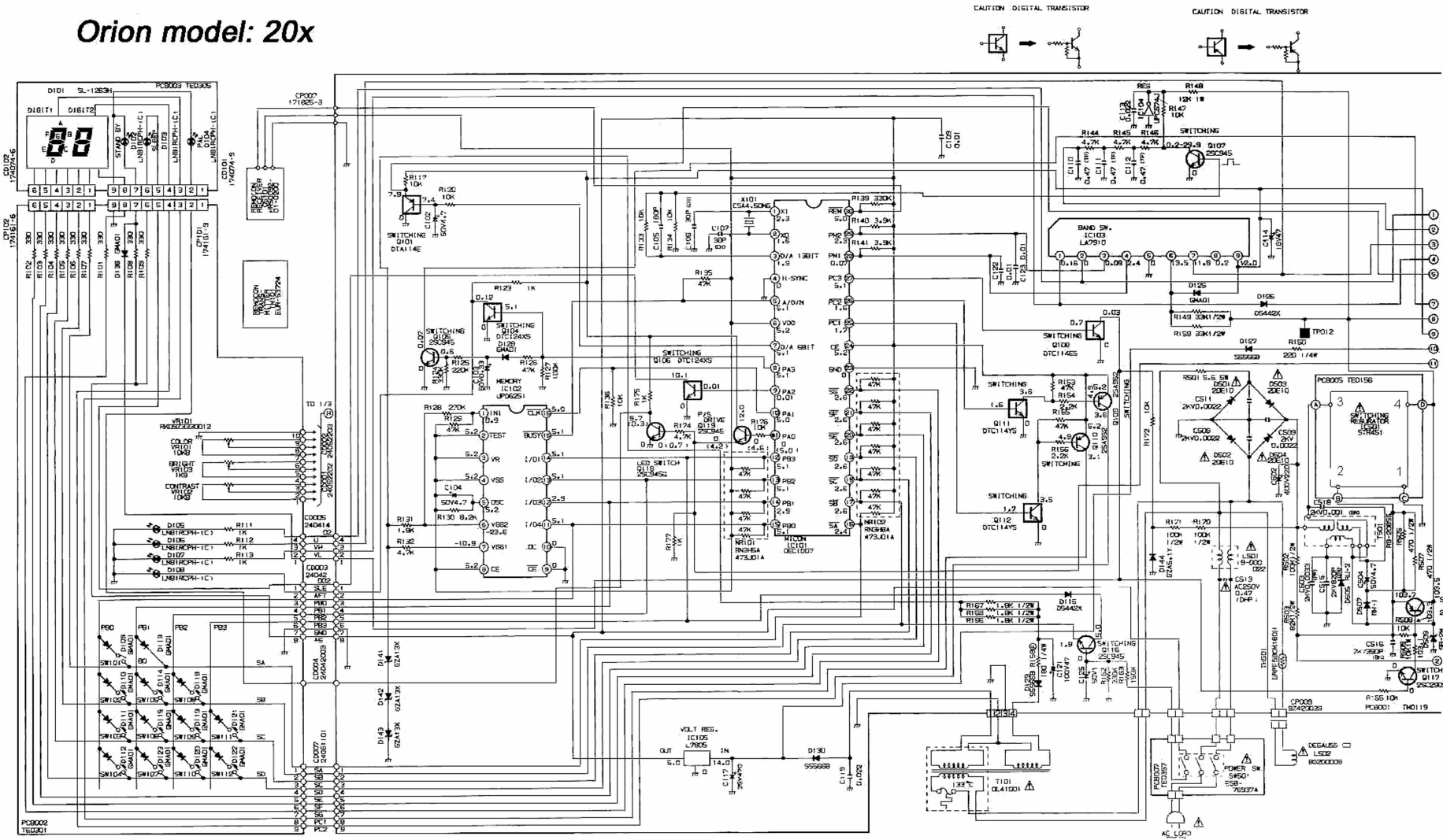

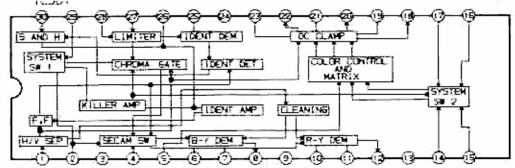

VOLTAGE

	Q505		Q507		Q508	
	P	S	P	S	P	S
E	0.0		0.0		12.0	
C	0.4	0.0	0.5	0.0	0.0	12.0
B	0.0	12.0	0.0	12.0	12.0	0.0

P : PAL S : SECAM

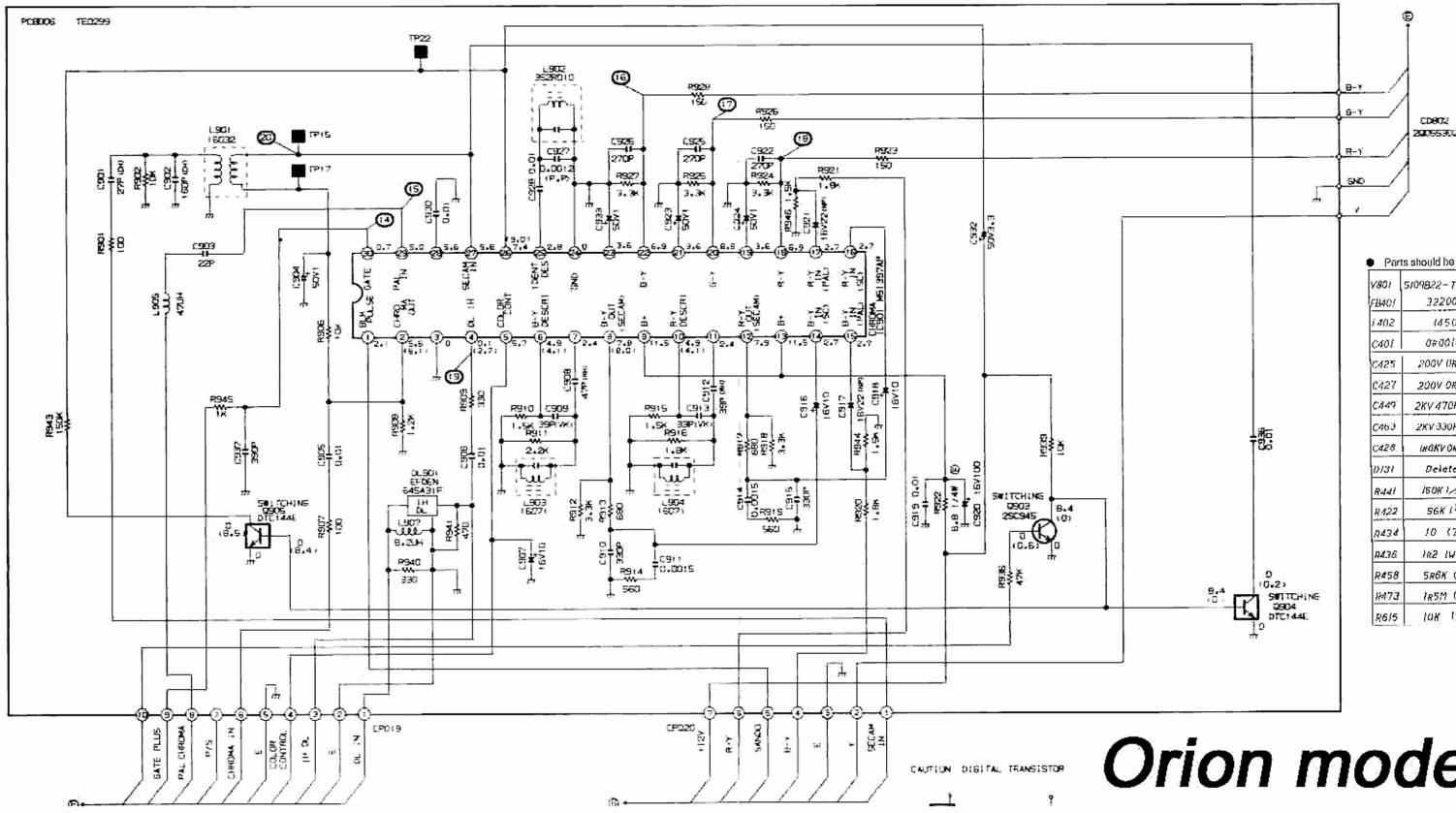

● Parts should be exchanged in accordance with CRT below.

V801	510KB22-TC20(C)	A41B1RV70X11	510UFB22-TC20(PH)
FB401	3220012	3220007(3220012)	3220012
L402	1450	2112	2112
C401	0K0018 (H)	0K0027 (H)	0K0018 (H)
C425	200V 0K82	200V 0K68	200V 0K68
C427	200V 0K56	200V 0K62	200V0K62
C449	2KV 470P (BR)	2KV 1000P (BR) (2KV 1500P (BR))	2KV470P BR
C463	2KV 330P (BR)	2KV 470P (BR)	2KV 470P BR
C428	1K6KV 0K012	1K6KV 0K012	1K6KV 0K013
D131	Delete	RD6R2EB2	RD6R2EB2
R441	150K 1/4W	150K 1/4W	120K 1/4W
R422	56K 1/6W	68K (1/6W)	68K 1/6W
R434	10 (7W)	12 (7W)	12 (7W)
R436	1R2 1W (F)	1R8 1W (F)	1R5 1W (F)
R458	5R6K (1/6W)	6R8K (1/6W)	6R8K 1/6W
R473	1R5M (1/4W)	1M (1/4W)	820K 1/4W
R615	10K (1/4W)	15K (1/4W)	15K 1/4W

Orion model: 20x