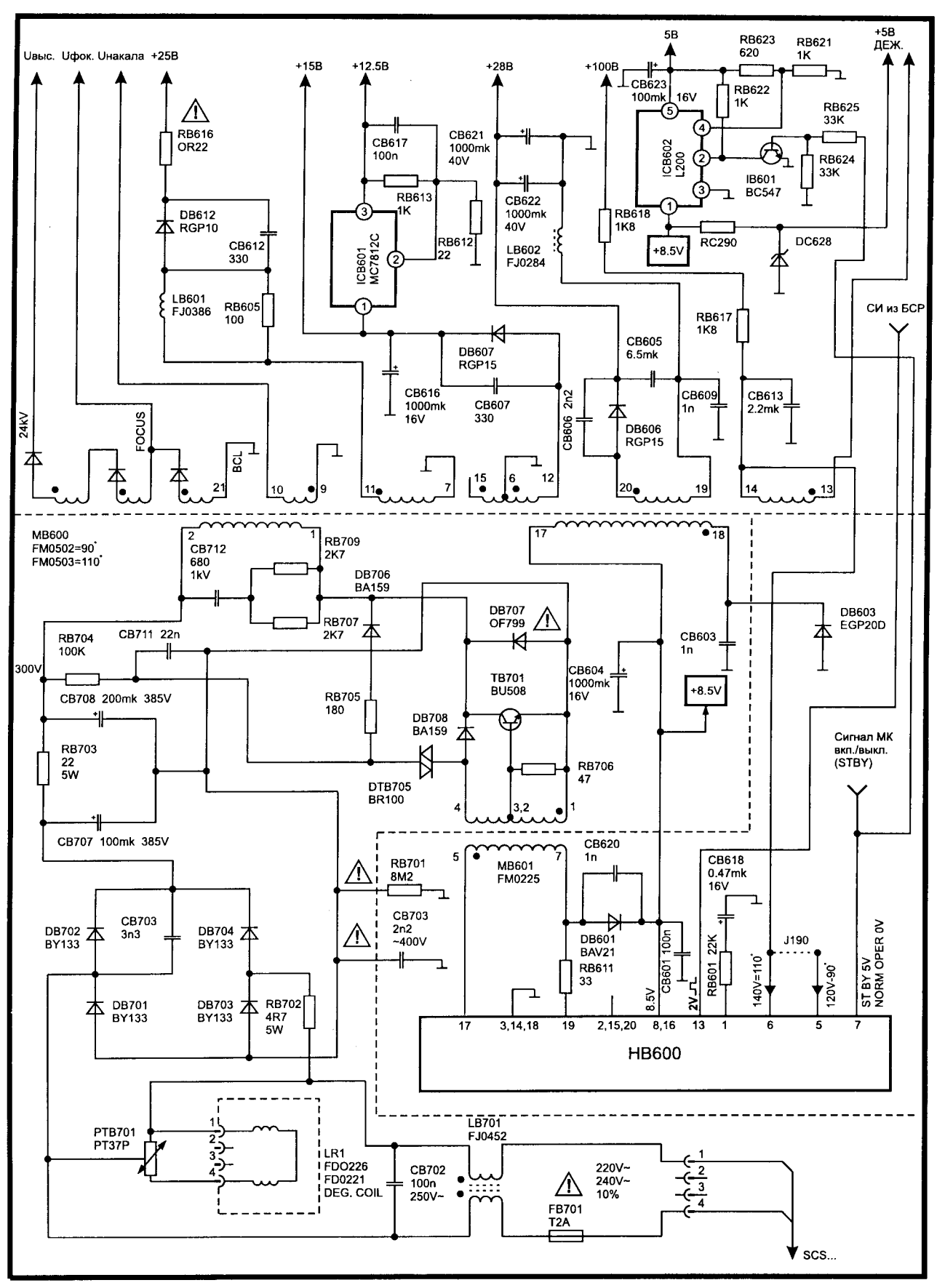
Uвыс. Uфок. Uнакала +25В
+15В
+12.5В
+28В
+100В
5В
+5В ДЕЖ.
RB623 620
RB621 1K
CB623 100mk 16V
RB622 1K
RB625 33K
RB624 33K
IB601 BC547
ICB602 L200
RB616 OR22
CB617 100n
CB621 1000mk 40V
RB613 1K
RB612 22
ICB601 MC7812C
CB622 1000mk 40V
LB602 FJ0284
RB618 1K8
+8.5V
RC290
DC628
DB612 RGP10
CB612 330
LB601 FJ0386
RB605 100
DB607 RGP15
CB616 1000mk 16V
CB607 330
CB605 6.5mk
CB606 2n2
DB606 RGP15
CB609 1n
RB617 1K8
CB613 2.2mk
СИ из БСР
24kV
FOCUS
BCL
MB600
FM0502=90°
FM0503=110°
CB712 680 1kV
RB709 2K7
RB707 2K7
DB706 BA159
DB707 OF799
CB603 1n
DB603 EGP20D
RB704 100K
CB711 22n
300V
CB708 200mk 385V
RB705 180
TB701 BU508
CB604 1000mk 16V
+8.5V
DB708 BA159
RB703 22 5W
DTB705 BR100
RB706 47
Сигнал МК вкл./выкл. (STBY)
CB707 100mk 385V
RB701 8M2
CB703 2n2 ~400V
MB601 FM0225
CB620 1n
CB618 0.47mk 16V
DB702 BY133
CB703 3n3
DB704 BY133
DB601 BAV21
RB611 33
CB601 100n
RB601 22K
J190
140V=110°
120V-90°
ST BY 5V
NORM OPER 0V
DB701 BY133
DB703 BY133
RB702 4R7 5W
8.5V
2V
17 3,14,18 19 2,15,20 8,16 13 1 6 5 7
HB600
PTB701 PT37P
LR1 FDO226 FD0221 DEG. COIL
CB702 100n 250V~
LB701 FJ0452
220V~ 240V~ 10%
FB701 T2A
SCS...