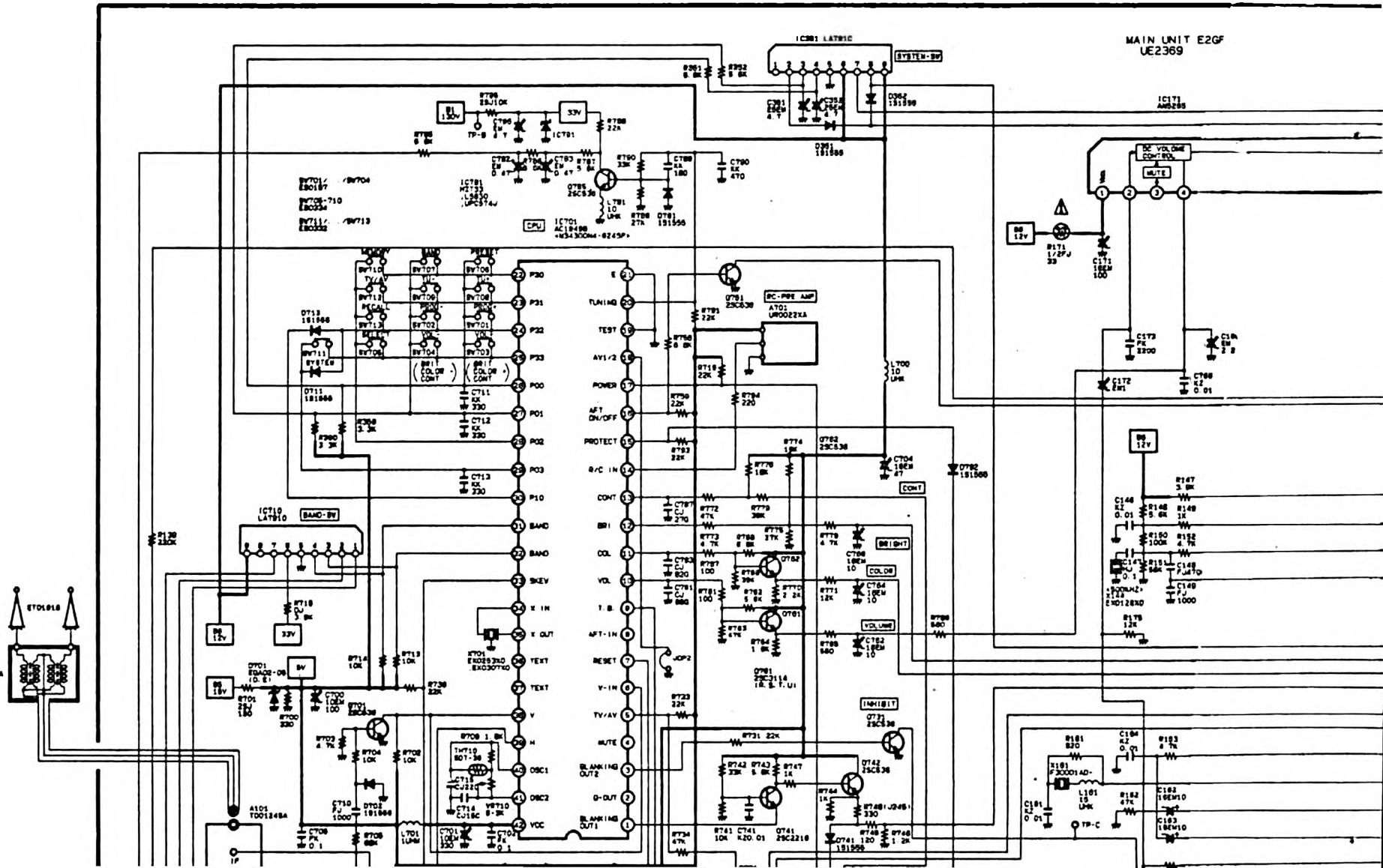
MAIN UNIT E2GF
UE2369
IC381 LA7910
SYSTEM-5V
IC171
AN6285
DC VOLUME CONTROL
MUTE
CPU
IC701
AC19498
<N34300M4-0245P>
RC-PRE AMP
A701
UR0022XA
BAND-5V
CONT
BRIGHT
COLOR
VOLUME
INHIBIT
ET0167
ET0168LA
ET0168
A101
TD0124SA
X101
F300014D-
TP-C
TP-B
JOP2
P30
P31
P32
P33
P00
P01
P02
P03
P10
BAND
SKEW
X IN
X OUT
TEXT
V
H
OSC1
OSC2
VCC
E
TUNING
TEST
AV1/2
POWER
AFT ON/OFF
PROTECT
R/C IN
CONT
BRI
COL
VOL
T.B.
AFT-IN
RESET
V-IN
TV/AV
MUTE
BLANKING OUT2
G-OUT
BLANKING OUT1

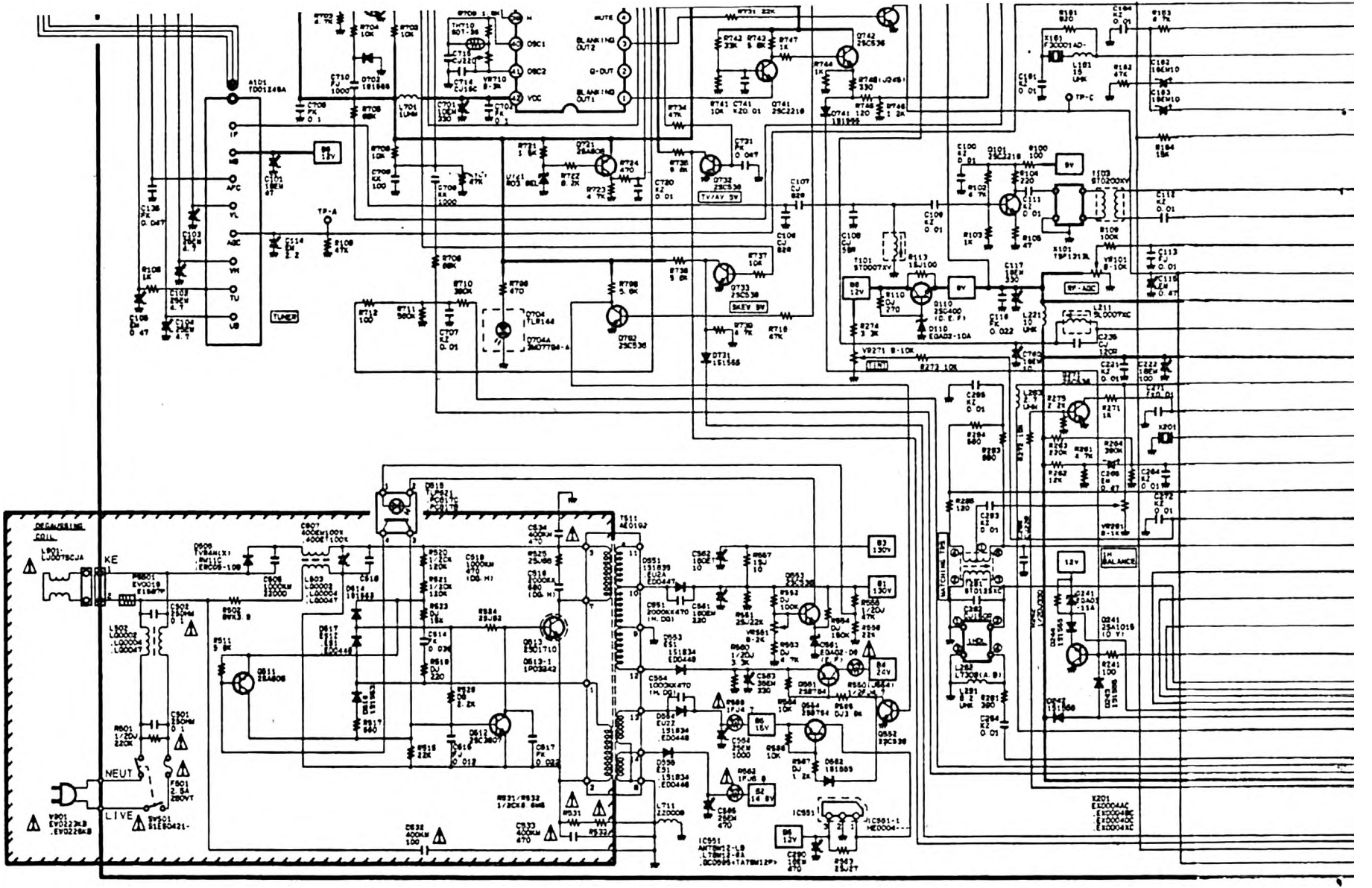
DEGAUSSING COIL
KE
NEUT
LIVE
TUNER
TV/AV 5V
SKEW 9V
BLANKING OUT2
Q-OUT
BLANKING OUT1
MUTE
VCC
IF
AFC
VL
AGC
VH
TU
LB
TP-A
TP-C
RF-AGC
H-BALANCE
V-BALANCE
FOCUS
SCREEN
HEATER
FILAMENT
12V
9V
15V
14.8V
26V
130V
A101
T001248A
T101
ST0007XV
T103
ST0200XV
X101
TSP1313L
X201
E200044AC
E200040C
E200041C
IC551
AN7881Z-LB
IC551-1
HE0004

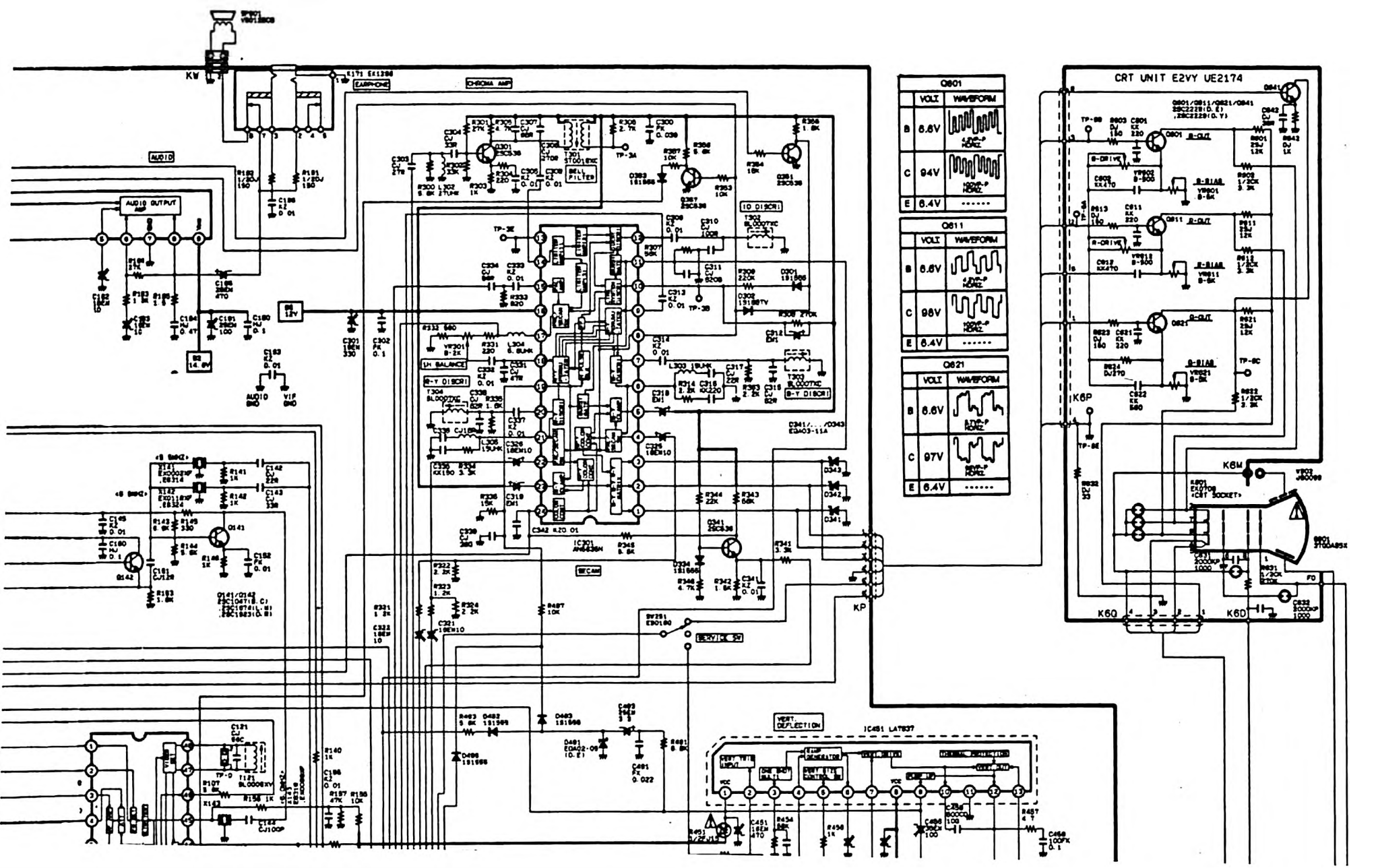
CRT UNIT E2VY UE2174
Q601
VOLT
WAVEFORM
B 6.6V
C 94V
E 6.4V
Q611
B 6.6V
C 98V
E 6.4V
Q621
B 6.6V
C 97V
E 6.4V
AUDIO OUTPUT AMP
CHROMA AMP
EARPHONE
AUDIO
BELL FILTER
IC701 AN6436M
IC451 LA7837
VERT. DEFLECTION
SERVICE SW
K6P
K6M
K6Q
K6D
KP
FD

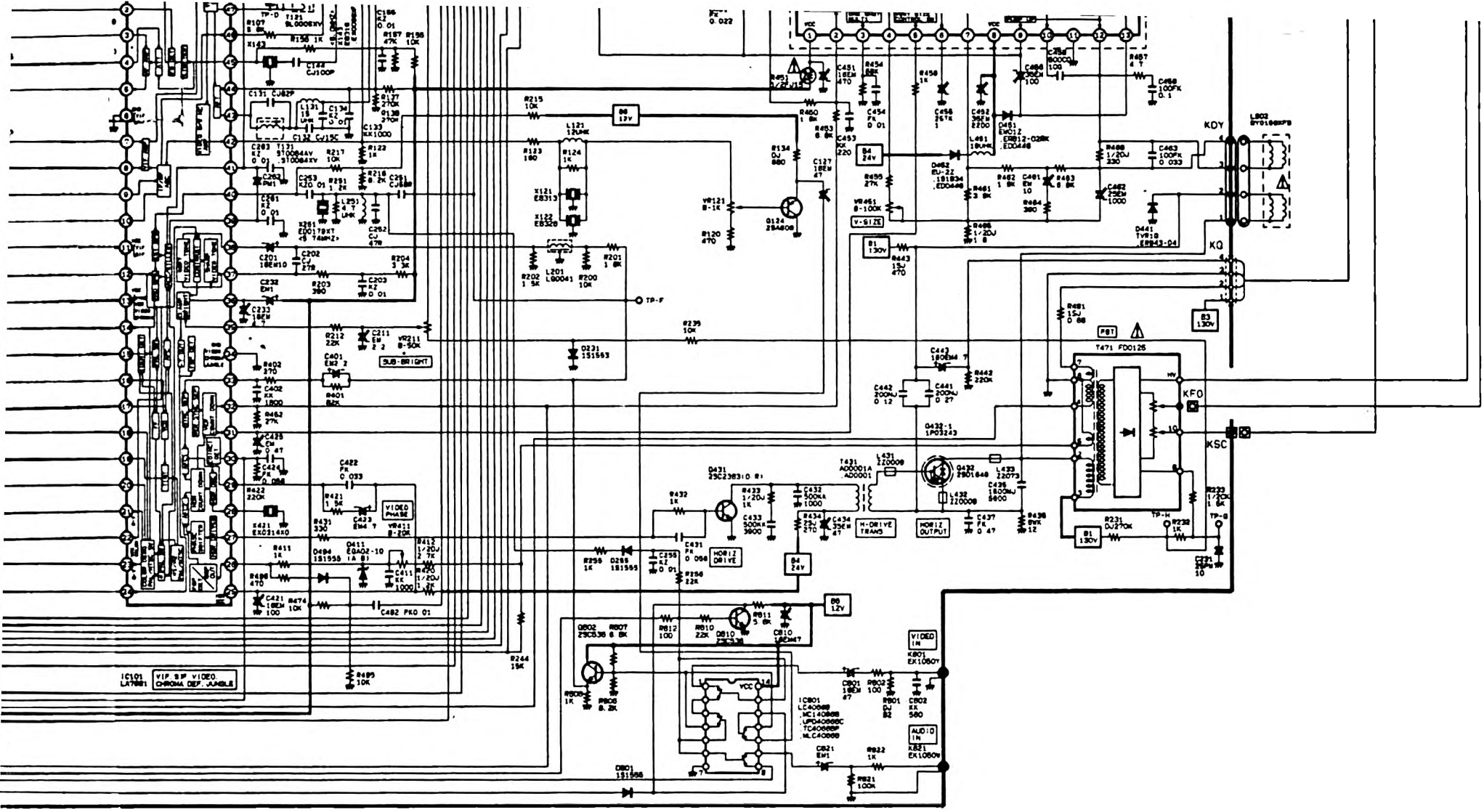
IC101
LA7881
VIF, SIF VIDEO,
CHROMA DEF, JUNGLE
SUB-BRIGHT
VIDEO PHASE
HORIZ DRIVE
H-DRIVE TRANS
HORIZ OUTPUT
V-SIZE
VIDEO IN
AUDIO IN
KDY
KQ
KFO
KSC
TP-F
TP-H
TP-G
B6 12V
B4 24V
B1 130V
B3 130V
T471 FD0125