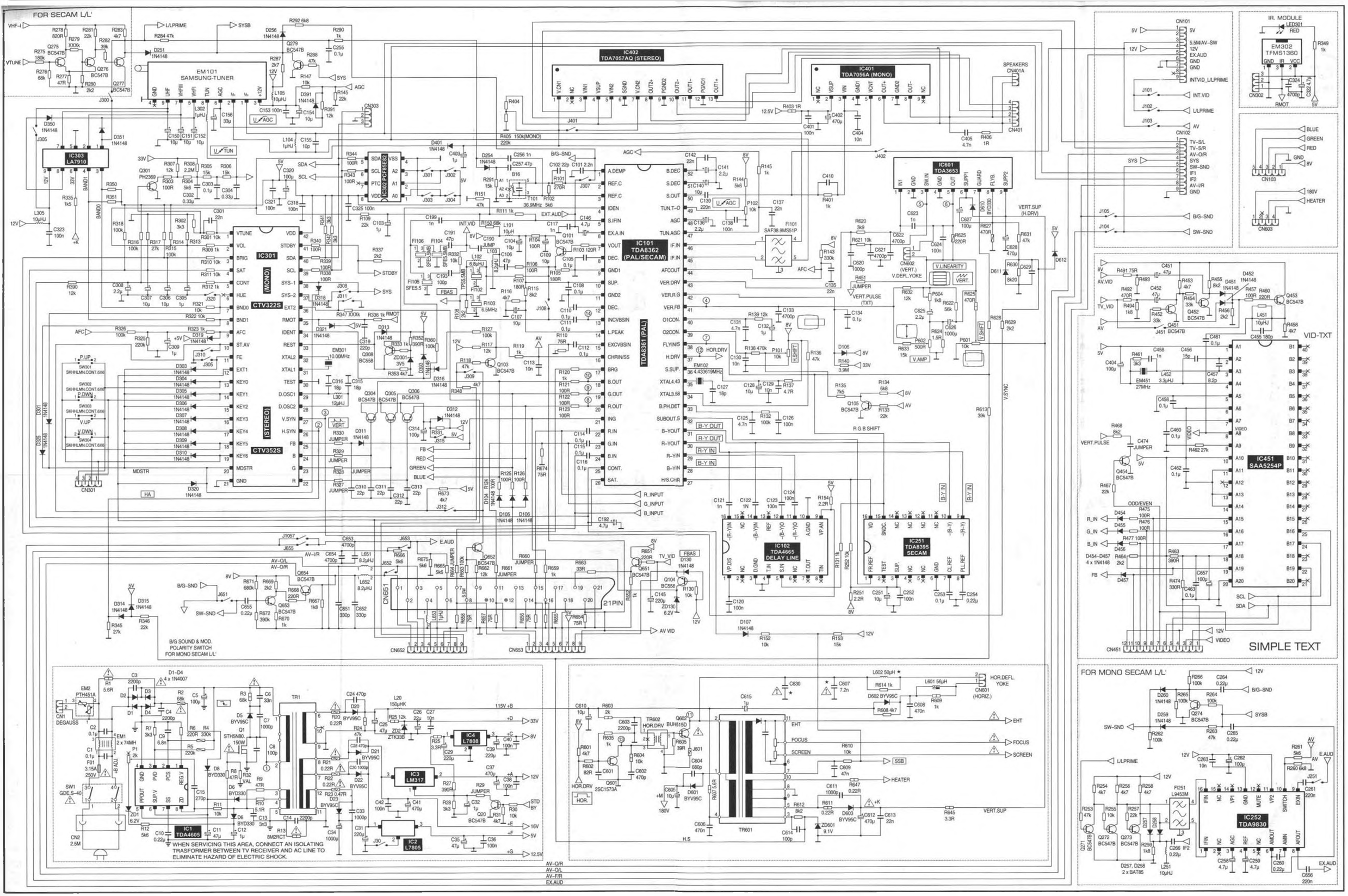

OTVC Telestar 4155T strona 1/2

IICAM BOARD CIRCUIT DIAGRAM

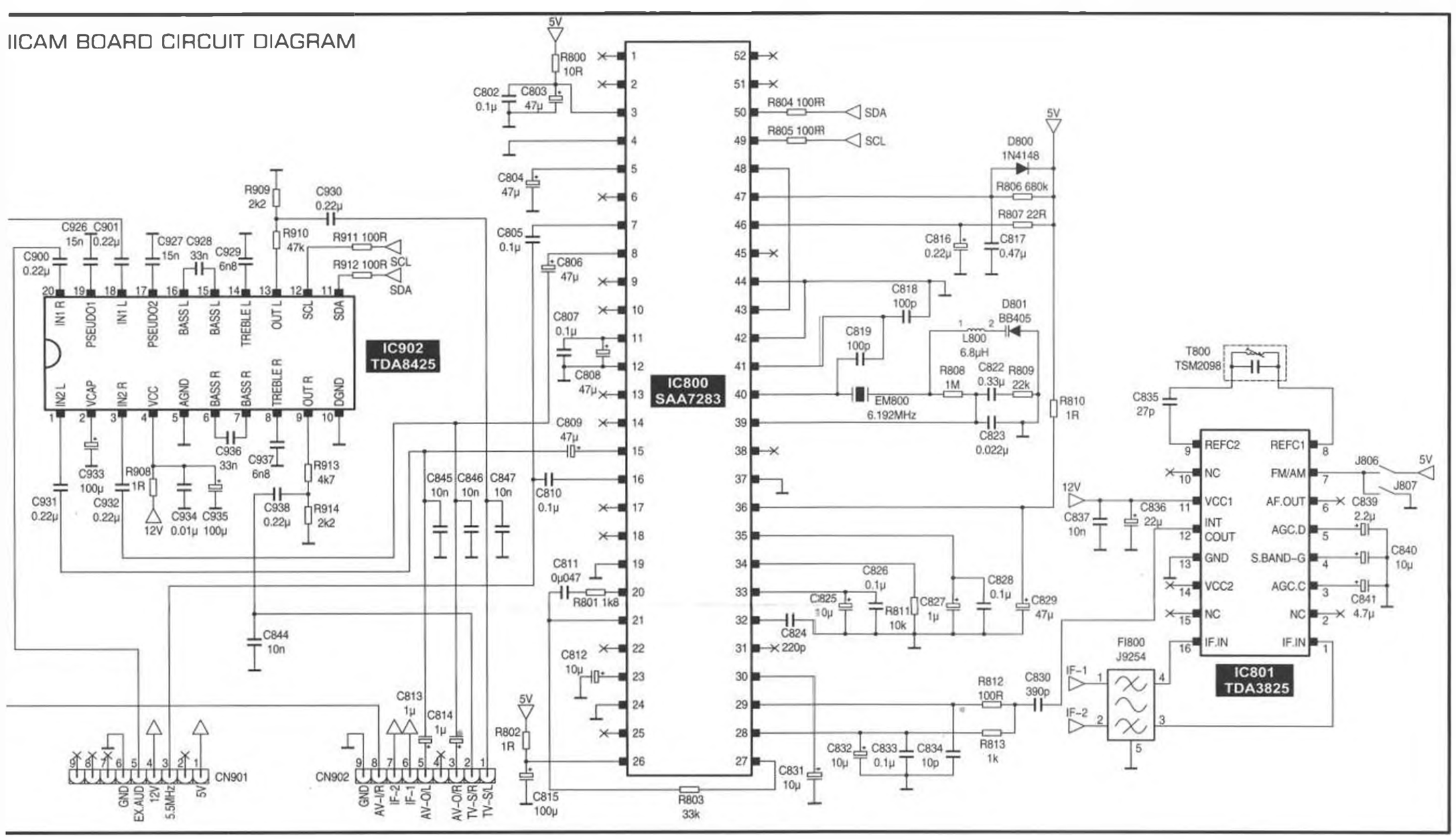

COMPONENT	C407	R947	L802	C608	R1153
CRT					
20" SAMSUNG A48ECR 11X60	8.2nF 1600V	0.1R 1W	JUMPER	470nF 200V	15k 1/6W
20" SAMSUNG A48ECR 11X60	8.2nF 1600V	0.1R 1W	JUMPER	470nF 200V	15k 1/6W
21" SAMSUNG A51EER 11X38	7.8nF 1600V	0.1R 1W	56µH	470nF 200V	15k 1/6W
20" POLCOLOR A48EEV 13X01	7.8nF 1600V	0.1R 1W	110µH	470nF 200V	15k 1/6W
21" POLCOLOR A51EEV 13X01	8.8nF 1600V	0.1R 1W	110µH	470nF 200V	15k 1/6W
20" VIDEOCOLOR A48EEV 13X01	7.8nF 1600V	0.1R 1W	110µH	470nF 200V	15k 1/6W
21" VIDEOCOLOR A51EEV 13X09	5.6nF 1600V	0.1R 1W	56µH	470nF 200V	15k 1/6W

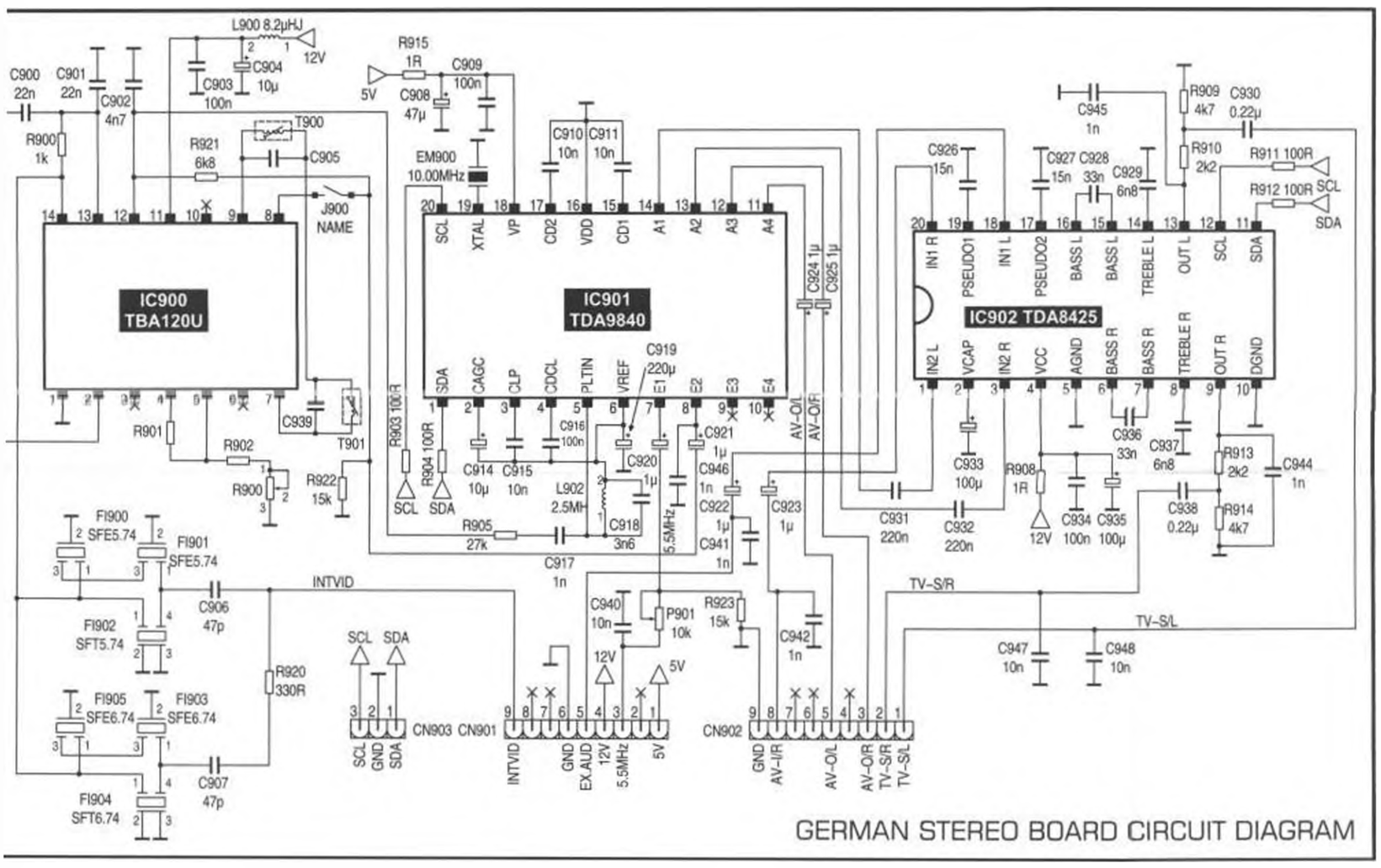

GERMAN STEREO BOARD CIRCUIT DIAGRAM

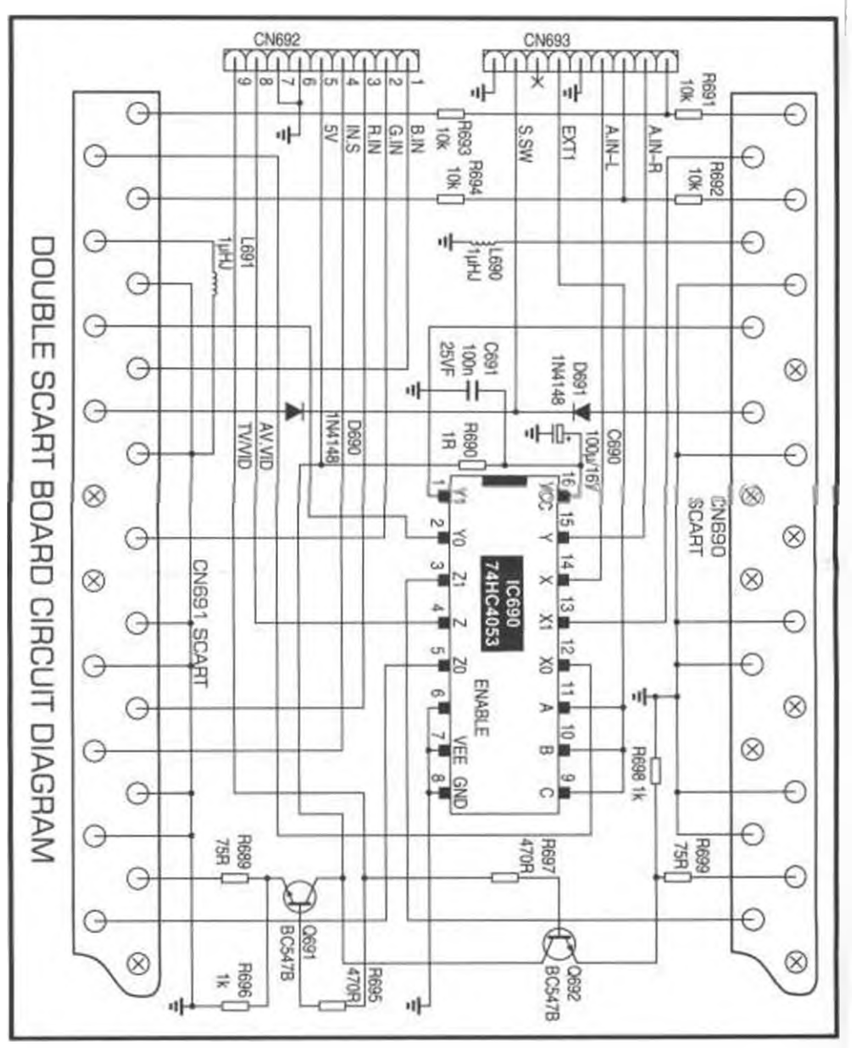

DOUBLE SCART BOARD CIRCUIT DIAGRAM

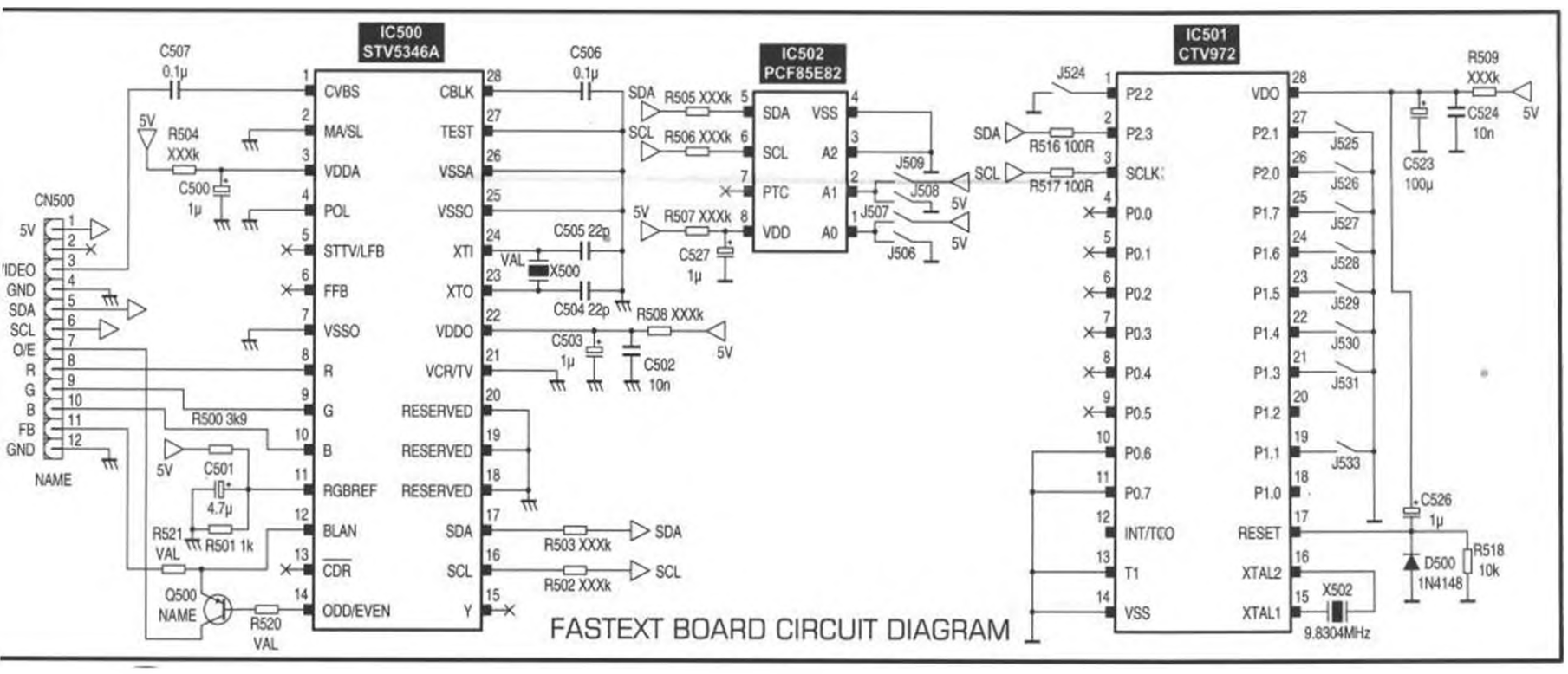

FASTEXT BOARD CIRCUIT DIAGRAM

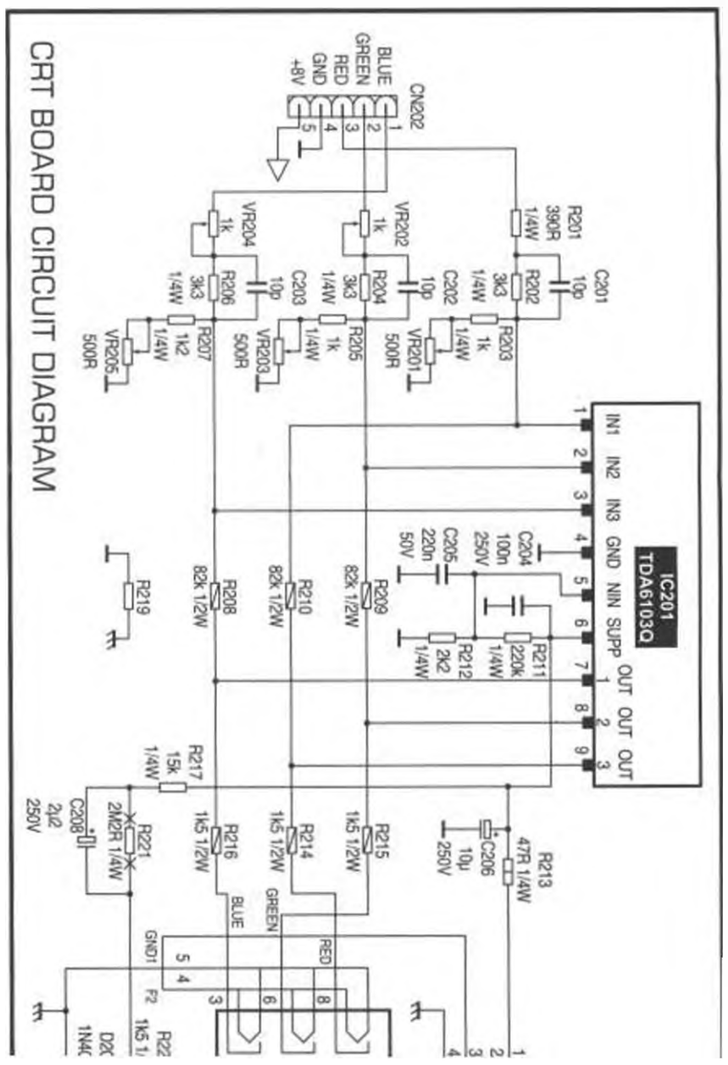

CRT BOARD CIRCUIT DIAGRAM